Statement

Thank you for selecting Veterinary Color Doppler Ultrasound System.

Prior to using the system, please read this user manual carefully.

In addition, keep this user manual so that you may read it at any time when necessary.

Product Information

Product Name: Veterinary Color Doppler Ultrasound System

Product Model: VU40, VU60

The system consists of the console (including monitor, control panel, and ECG data acquisition module), software package (software name: Color Doppler Ultrasound System Software, release version: V1), and probes.

Optional accessories: lithium battery, printer, foot switch, gel warmer, ECG leads, barcode reader, CD/DVD-RW drive, Wi-Fi adapter, Bluetooth adapter, and camera.

Optional ultrasound probes: see “2.4.2 Optional Probes” for details.

Application scope: The system is intended for veterinary use in clinical ultrasound examination and diagnosis.

Register/manufacturer: Wuhan Zoncare Bio-medical Electronics Co., Ltd.

Address: #380, High-tech 2nd road, Eastlake high-tech district, Wuhan, Hubei, P. R. China

Address of manufacturing: #380, High-tech 2nd road, Eastlake high-tech district, Wuhan, Hubei, P. R. China

Production date: see tag

Service life: 10 years

Intellectual Property Statement

Wuhan Zoncare Bio-medical Electronics Co., Ltd. owns the intellectual property rights to this product and this manual. (Hereinafter referred to as “Zoncare”)

No part of this manual may be reproduced, transferred, or copied, in any form or by any means, without written permission by Zoncare.

ZONCARE is the registered trademark or trademark of Zoncare.

Responsibility of the Manufacturer

Zoncare is responsible for the effects on safety, reliability, and performance of the product, only if:

- All installation operations, expansions, adjustments, upgrades and repairs of this product are conducted by Zoncare authorized personnel;
- All components for replacement, accessories and consumables are original of Zoncare or approved by Zoncare;
- Electrical installation complies with the applicable national standards and the requirements of this user manual;
- Use this product only in accordance with this user’s manual.

About this Manual

Issue date: 2026-04 Version: 1.0

This manual details all information necessary for safe operation of the system. The applications, functions, operations and maintenance of the product are described with the most comprehensive configuration in this manual. If there is any discrepancy between the description in the manual and the physical one, please prevail in kind. If you have questions, please contact us.

Figures shown in this manual may be different from physical ones, please prevail in kind.

This manual is intended for users familiar with the basic principles and techniques of ultrasound. It does not involve ultrasound training or medical procedures.

Conventions Used in this Manual

Before using the system, read carefully and be sure to completely understand these conventions in this manual.

Symbols and conventions	Description
DANGER	DANGER indicates a hazardous situation which, if not avoided, will result in death or serious injury.
	WARNING indicates a potentially hazardous situation, which, if not avoided, may result in physical injury or death.
CAUTION	CAUTION Indicates a potentially hazardous situation, which, if not avoided, could result in minor or moderate injury or equipment damage.
	Patient /user infection due to contaminated equipment.
NOTE	Provide additional Information.
Click	Press the **[Set]** button or tap the menu item on the Touch Screen.
Double-click	Press the **[Set]** button twice in quick succession.
Select	Highlight a menu item with the trackball.
[Bold]	Physical buttons or knobs on the device, prompts or menu items on the touch screen.
<Keyboard>	Keyboard keys.

Warranty

The warranty period is subject to the sale contract.

Consumables refer to disposable consumables that need to be replaced after each use or vulnerable materials that need to be replaced regularly. Consumables are not covered by warranty.

The warranty period starts from the date of delivery.

During the warranty period, Zoncare will provide you with free warranty service; beyond the warranty period, Zoncare will provide maintenance service for products under the condition of reasonable labor fee, spare parts fee and transportation fee.

But please note that even during the warranty period, the following condition is not covered by the free warranty. Zoncare will charge for repair and accessories:

- Artificial damage;
- Improper use;
- The voltage of the power grid is beyond the scope specified by the product;
- Irresistible natural disasters;
- Replace or use of parts, accessories, and consumables not approved by Zoncare or maintain the system by unauthorized personnel;
- Failures not arise from the product itself;
- Failure to follow any operation instruction of the user manual.

Disclaimer

Zoncare does not assume any responsibility for unintended use, mis-operation by unqualified medical personnel or failure to follow operation instruction of the user manual.

Zoncare does not assume any responsibility for any medical disputes arising from the rental of equipment to third parties or other institutions.

Contents

Chapter 1 Safety 1

1.1 Safety Information 1

1.1.1 Precautions 1

1.1.2 Labels and Symbols 5

1.2 Application of Acoustic Power 7

1.2.1 ALARA 7

1.2.2 Bioeffect 8

1.2.3 Output Display 8

1.2.4 Probe Surface Temperature 9

1.2.5 Acoustic Power Control 9

Chapter 2 System Overview 10

2.1 Intended Use/Indications for Use 10

2.2 Contraindications 10

2.3 Model Comparison 10

2.4 System Configuration 10

2.4.1 Standard Configuration 10

2.4.2 Optional Probes 10

2.4.3 Optional Accessories 12

2.5 System Components 13

2.5.1 Console 13

2.5.2 Control Panel 15

2.5.3 Trackball 18

2.5.4 Keyboard 18

2.5.5 Front Panel 20

2.5.6 I/O Board 21

2.5.7 Power Supply Panel 22

Chapter 3 Preparing the System 23

3.1 Moving the system 23

3.1.1 Transporting 23

3.1.2 Moving 23

3.2 Positioning 24
3.3 Connecting the System 24
3.3.1 External Power Supply 25
3.3.2 Battery Power Supply 25
3.4 Power On/ Off the System 26
3.4.1 Power on 26
3.4.2 Power off 27
3.4.3 Screensaver 27
3.5 Mechanical Adjustment 28
3.5.1 Adjust the Monitor 28
3.5.2 Adjust the Control Panel 30
3.5.3 Adjust the Touch Screen 31
3.6 Connect / Remove the Probe 31
3.6.1 Connect the Probe 31
3.6.2 Remove the Probe 32
3.7 Install the Gel Warmer 32
3.8 Foot Switch 33
3.9 Connect the Network 33
3.10 Connect Peripheral Device 34
3.10.1 Connect USB Device 34
3.10.2 Connect Printer 34
3.11 ECG 35
3.11.1 ECG Operation 36
3.11.2 ECG Maintenance 37
3.12 Barcode Reader 37
3.13 Screen 37
3.13.1 Home Screen 37
3.13.2 Touch Screen 38

Chapter 4 System Settings 40

4.1 Overview 40
4.2 System Preset 40
4.2.1 Region 40
4.2.2 General 42
4.2.3 Image 43

4.2.4 Application 44
4.2.5 Customize 45
4.2.6 Admin 46
4.2.7 BarCodes 49
4.3 Exam Preset 50
4.3.1 Add Exam Mode 50
4.3.2 Remove Exam Mode 51
4.3.3 Create/Delete User-defined Exam Mode 51
4.3.4 Adjust Exam Mode Display Position 51
4.4 Annotation Preset 52
4.4.1 Add Annotation 52
4.4.2 Remove Annotation 53
4.4.3 Add/Delete Custom Annotation 53
4.5 Measure Preset 53
4.5.1 General Measurement Preset 53
4.5.2 Application Measurement Preset 54
4.5.3 Report Template 57
4.6 zWorkflow Preset 58
4.6.1 Workflow Protocol 58
4.6.2 New Protocol 59
4.6.3 Basic zWorkflow Procedures 59
4.6.4 Section Operation 59
4.7 Network Preset 60
4.7.1 Local Network 60
4.7.2 Transfer Assistant 61
4.8 Print Preset 62
4.9 About & Maintenance 63
4.9.1 System Information 64
4.9.2 Detailed Information 64
4.9.3 Option 64
4.9.4 Other 64

Chapter 5 Preparing an Exam 66

5.1 Animal Information 66
5.1.1 New Animal 66

5.1.2 Retrieve Animal Information (Station) 69
5.1.3 Retrieve Animal Information (DICOM) 70
5.2 Select Probe and Exam Mode 70
5.3 Select Imaging Mode 71
5.4 Resume/Activate Exam 71
5.4.1 Resume Exam 71
5.4.2 Activate Exam 71
5.5 Cancel / End Exam 72
5.5.1 Cancel Exam 72
5.5.2 End Exam 72

Chapter 6 Optimizing the Image 73

6.1 Imaging Mode 73
6.2 Operation Interface 73
6.3 B-mode 73
6.3.1 Basic Procedure of B-mode 73
6.3.2 Image Optimization (B) 74
6.4 M-mode 80
6.4.1 Basic Procedure of M-mode 80
6.4.2 Image Optimization (M) 80
6.5 Color Mode 81
6.5.1 Basic Procedure of Color Mode 82
6.5.2 Basic Procedure of PDI mode 82
6.5.3 Image Optimization (Color/PDI) 83
6.6 Doppler Imaging Mode 88
6.6.1 Basic Procedure of PW-mode 88
6.6.2 Basic Procedure of CW mode 89
6.6.3 Image Optimization (PW/CW) 91
6.7 Anatomical M-mode 94
6.7.1 Linear Anatomical M-mode 95
6.7.2 Curved Anatomical M-mode 95
6.8 Color M-mode 96
6.9 Tissue Doppler Imaging (TDI) 97
6.9.1 TDI-modes 97
6.9.2 Basic Procedure of TDI mode 97

6.10 Panoramic Imaging 98
6.10.1 Basic Procedure of Panoramic Imaging 98
6.10.2 Image Optimization (Pano) 99
6.10.3 Image Quality 100
6.11 Elastography 100
6.11.1 Basic Procedure of Elastography 100
6.11.2 Image Optimization (Elastography) 101

Chapter 7 Image Review and Management 103

7.1 Splitting Display 103
7.1.1 Dual-Split Display 103
7.1.2 Quad-Split Display 103
7.2 Image Magnification 104
7.2.1 Global Zoom 104
7.2.2 Local Zoom 104
7.2.3 Full Screen 105
7.3 Freeze the Image 105
7.4 Cine Replay 105
7.4.1 Cine Replay Region 106
7.4.2 Manual Replay 107
7.4.3 Auto Replay 107
7.5 Annotation 107
7.5.1 Comment 107
7.5.2 Trace 109
7.5.3 Arrow 109
7.5.4 Body Mark 110

Chapter 8 Image Measurement 112

8.1 Basic Operating Procedure 112
8.2 General Measurement 113
8.2.1 2D General Measurement 113
8.2.2 M General Measurement 119
8.2.3 Doppler General Measurement 121
8.3 Application Measurement 125
8.3.1 Abdomen 126

8.3.2 Reproduction 131
8.3.3 Cardiology 132
8.3.4 Small Parts 165
8.3.5 Vascular 166

Chapter 9 Report 173

9.1 View the Report 173
9.2 Edit the Report 174
9.2.1 Edit the Measurement Data 174
9.2.2 Add Comments 175
9.2.3 Add Image 175
9.3 Preview the Report 175
9.4 Print the Report 175
9.5 Back up the Report 176
9.5.1 Generate 176
9.5.2 Load 176
9.5.3 Export 176

Chapter 10 Animal Data Management 177

10.1 Storage 177
10.1.1 Image Storage 177
10.1.2 Cine Storage 177
10.2 Image Viewing 178
10.2.1 Current Animal 178
10.2.2 Previous Animals 179
10.3 Delete Image/Data 180
10.3.1 Current Animal 180
10.3.2 Previous Animals 181
10.4 Image/Data Recovery 181
10.5 Exporting Image/Data 181
10.5.1 Exporting to USB Storage Device 182
10.5.2 Exporting to DVD Disc (Optional) 183
10.5.3 Exporting to Electronic Device 184
10.5.4 Exporting to DICOM Server 187
10.6 Import Image/Data 187

10.7 Disk Space Detection 188
10.8 Task Manager 188
10.9 Image Demo 188
10.10 Zonnet Imaging 190

Chapter 11 DICOM 191

11.1 DICOM Preset 191
11.1.1 DICOM Local Preset 191
11.1.2 Service Preset 192
11.2 DICOM Service 201
11.2.1 DICOM Storage 201
11.2.2 DICOM Print 202
11.2.3 DICOM Worklist 202
11.2.4 DICOM MPPS 203
11.2.5 DICOM Storage Commitment 203
11.2.6 DICOM Query / Retrieve 204
11.3 Structured Report 205

Chapter 12 Probe and Biopsy 206

12.1 Probe 206
12.1.1 Structure of Probe 206
12.1.2 Probe Usage 206
12.1.3 Probe Cleaning 208
12.1.4 Probe Disinfection 208
12.1.5 Probe Maintenance 211
12.2 Biopsy 212
12.2.1 Calibrate the Biopsy Guide Line 212
12.2.2 Biopsy Procedure 213
12.2.3 Bracket Cleaning and Disinfection 214
12.2.4 Bracket Storage and Transportation 214

Chapter 13 System Maintenance 215

13.1 External Cleaning 215
13.1.1 Clean the Trackball 215
13.1.2 Clean the Probe Holder 216

13.1.3 Clean the Gel Warmer 217
13.1.4 Clean the Printer 218
13.1.5 Clean the ECG equipment 218
13.2 Safety Check 218
13.3 Troubleshooting 219
13.4 Disposal 219
13.5 After Sales Service 220
Appendix A. Technical Specifications 221
Appendix B. EMC Statement 225
B.1 Electromagnetic Interference 227
B.1.1 Typical Interference on Ultrasound System 227
B.1.2 Precautions to Protect from EMI 228
B.2 Declaration of Emissions 229
B.3 Declaration of Immunity 230
B.4 Minimum Separation Distances 232
Appendix C. Toxic and Hazardous Substances or Elements 233

Chapter 1 Safety

1.1 Safety Information

Read, understand and strictly follow the instructions before using the system to ensure the safety of animal and operator.

This system is intended to be used by, or under the supervision of, qualified clinicians or healthcare professionals. Unauthorized person or untrained person shall not perform any operation.

Manufacturer is responsible for the effects on safety, reliability, and performance of the product, only if following precautions are strictly followed.

1.1.1 Precautions

1.1.1.1 System safety

DANGER

- **DO NOT operate the system in the presence of flammable gases or anesthetics or ethyl alcohol. Explosion may result.**
  - **If flammable substances are detected, DO NOT plug in the power cord or power on the system.**
  - **If flammable substances are detected after the system is powered on, DO NOT attempt to shut down the system or unplug the power cord.**
  - **If flammable substances are detected, exhaust the air in the area and make well ventilation before shutting down the system.**
- **Never operate the system in thunderstorm weather.**



- **DO NOT connect the grounding wire to any gas pipeline or water pipe. Otherwise it may lead to poor grounding or explosion risk.**
- **Connect the grounding wire correctly before powering on the system. Make sure the system grounding is always well-connected to the earth when operating the system.**
- **Ensure that a standard three-pronged grounding plug is used. Push the power plug securely to the hospital grade grounding outlet of appropriate power rating.**
- **Never use an adapter.**
- **DO NOT place liquids on or above the console. Spilled liquid may contact live parts and increase the risk of electric shock. If liquid is accidentally into the system, stop using the system immediately and shut down the system, contact Zoncare Customer Service Department or sales representative.**
- **To avoid the risk of electric shock, the device must be connected a power supply with protective grounding.**
- **Never allow the animal to contact the live part of the system or other device, e.g. Signal I/O ports. Electric shock may result.**

- **DO NOT use the system with high-frequency surgical equipment, high frequency electrotome, or defibrillator.**
- **Unauthorized personnel are NOT allowed to remove protective covers. Short-circuit or electric shock may result. Refer servicing to authorized service personnel only.**
- **The system contains button battery; unauthorized personnel are NOT allowed to repair or replace the battery.**
- **Before cleaning the system, shut down the system and unplug the power cord. Otherwise, electric shock may result.**
- **Keep the system dry all the time; avoid fast moving the system from a cold place to a warm place. Otherwise, condensation or water droplets may occur, which may lead to short circuit or shock hazard.**
- **When the non-medical electrical equipment in the system is powered by a removable, multiperture socket with an isolating transformer, the plug must be full-plugged into a standard socket (hospital grade). Professional installer is responsible to comply with the safety requirements.**
- **All devices (analog and digital) connected to this system must comply with specified IEC standards (e.g. IEC 60950 information technology equipment safety standard and EN 60601-1 medical equipment standard). All configurations must be in accordance with relevant requirements of IEC standards. When using additional peripheral equipment that is to be interconnected by functional connection, the combination is considered to be a medical electrical system. It is your responsibility to comply with EN 60601-1 and test the system to those requirements. If you have questions, contact your sales representative.**
- **Always use the rear handle to move the system. When moving the system, make sure the casters are unlocked and all cables are put away from the casters. When moving the system for long distance or on inclines, it shall be moved by two people. Avoid ramps that are steeper than 10 degrees to avoid tipping over the system.**
- **If you have any doubts of the installation or routing of external protective cables, use the internal power supply of the system.**
- **Sterilization of the machine and accessories is not recommended unless required in the instructions of the accessories.**
- **The manufacturer shall be notified when the system is scrapped.**

CAUTION

- **If any part of the system is known or suspected to be defective or incorrectly adjusted, DO NOT use the system until it is repaired.**
- **Use the system in proper environment. DO NOT use the system in the cases of direct sunlight, heat source, high humidity, drastic temperature change, dusty or vibration-easily situation.**
- **DO NOT use the system in the vicinity of strong electric field, magnetic field or mobile radio frequency communication equipment, such as mobile phones, radio transceivers, mobile radio transmitters, etc. Otherwise, poor performance or even malfunction may result.**
- **When using movable multiperture socket, qualified, safe products with grounding protection should be selected, and the maximum allowable load should not exceed the maximum power of the**

system.

- **DO NOT connect non-system components of electrical equipment to movable multiperture sockets; otherwise it may cause interference, overload and other risks.**
- **DO NOT place movable multiperture sockets on the ground.**
- **When there is a large temperature difference in the operating environment of the system, the system should be vacant for 4 hours before the first power-on to keep the temperature and humidity reach a balance within the system.**
- **The system must be installed and set up by the manufacturer's authorized or trained personnel. Unauthorized personnel may not disassemble, install or misuse the system.**
- **Shut down the system and unplug the power cord before moving the system.**
- **Check the casters for obvious damage or malfunction before moving the system.**
- **Avoid large vibrations during transportation. Mechanical parts damage may result.**
- **DO NOT lean or sit on the control panel. Function button damage may result.**
- **DO NOT place any object on the control panel to prevent them from falling and causing damage.**
- **DO NOT block the air filter or the air outlet. Otherwise, the internal temperature of the system may rise, causing fire, personal injury and other potential hazards.**
- **If the system triggers the shutoff protection, it indicates the malfunction of the system or peripheral equipment. Contact manufacturer's Customer Service Department or sales representative.**
- **Maintenance shall be taken regularly to ensure the performance of the system, and ensure that the system is well grounded and meets the safety requirements.**
- **Changes and additions to the system should be conducted only by personnel authorized by the manufacturer.**
- **The manufacturer may provide, upon request, block diagrams, lists of spare parts, descriptions, adjustment instructions, or similar information which helps qualified technical personnel in repairing those parts of the system which have been defined as repairable.**

1.1.1.2 Accessories Safety



- **Use only approved accessories, e.g. probes, peripheral equipment or cables.**
- **Ultrasound probes are intended for use by qualified specialist staff only. Physicians who use this system for biopsy must undergo professional ultrasound guidance training and strictly observe the operation requirements of biopsy in order to avoid unnecessary harm to animals.**
- **DO NOT immerse any probes beyond the specified cleaning or**

disinfection level shown in "12.1.4 Probe Disinfection".

- **Never make conducting solution contacts with probes.**
- **Printers can be used in an animal environment.**
- **For the safe use and maintenance of the printer, please refer to the printer manual.**
- **Thermal printers shall be only powered by external power source.**
- **Ensure that the probe and cable are normal before and after performing an ultrasound exam. Use the probe with care. Stop use immediately if the probe appears to be malfunctioning.**
- **Pay attention to careful use of cable, check the cable before and after use. If there is any damage, stop using the system immediately.**
- **Never attempt to strike or damage the surface of transducer. Otherwise, electric shock may result when using.**
- **Components connected to the system shall meet the safety requirements in this manual.**

CAUTION

- **The system and accessories are not disinfected when delivered. Before using probe and biopsy bracket, disinfect them according to the method provided in their instructions.**
- **Always inspect whether the edge of the probe is too sharp or the surface is too rough before using the probe. If so, replace the probe to avoid damaging sensitive tissue.**
- **Use the probe with care, and place the probe properly in the probe holder after use. When out of service for a long time, the probe should be protected by a silicone probe cap.**
- **DO NOT disconnect probe when scanning. Otherwise, system damage may result.**
- **Normally, there is no risk of burns when using this system; however, if the probe is placed in the same part of the animal's body for a long time, burns may result. Under the condition of obtaining effective images, shorten the inspection time as possible.**
- **Shut down the system before plugging or unplugging the system or other peripheral equipment (such as printers). Otherwise system damage may result.**
- **Always use approved, sterile coupling gel. Read the instructions of the coupling gel carefully before use.**
- **Remove the coupling gel from the probe thoroughly after each use. Otherwise, moisture in the coupling gel may affect the safety and performance of the probe.**
- **After cleaning or disinfecting accessories, the chemical reagents or odors must be completely removed.**
- **Never use foot switch in operating room.**

1.1.1.3 Software Safety

CAUTION

- **To ensure the security of data, users must back up to external storage media when recording important data (such as hospitals, animal data, etc.), for the data stored in the system may be lost due to abnormal operation or failure.**

- **DO NOT shut down the system when printing, saving or loading data; otherwise, data will be lost.**
- **Improper power failure may result in damage to the drive or system.**
- **Attempt to power the system on again at least 5 minutes after each shutdown. Otherwise, system malfunction may result.**
- **DO NOT run non-system software on your system computer.**
- **Before using the USB flash disk, please format the USB flash disk to prevent computer viruses from intruding the system.**

1.1.1.4 Biological Hazard



- **To ensure the safety of animals and inspectors, it is forbidden to directly touch samples, mixtures and waste liquids. Please use protective materials (gloves, probe sheath, etc.) during operation, and perform disinfection steps as needed.**
- **If the sample contacts with skin inadvertently, you must immediately stop operating and notify your physician.**
- **Some disinfectants have strong acidity or alkalinity. Please use them carefully to prevent direct contact with hands and clothes. If hands or clothes are inadvertently exposed to disinfectants, wash them with soap and flowing water immediately; if disinfectants enter eyes inadvertently, wash them with plenty of clean water immediately and consult an ophthalmologist.**
- **Disinfectants, intensive cleaning agents and waste liquids must be disposed of as bio-hazardous material in accordance with local standards. Consult the relevant disinfectant manufacturer or distributor for details.**
- **Probes used on animals with transmissible spongiform encephalopathy (e.g. Mad Cow Disease) must be disposed of. Otherwise, it may infect the animals and operators. There is no method to clean, disinfect the probes used by prion disease patients currently.**
- **Follow all internal infection control procedures applicable to personnel and systems.**
- **Disposable biopsy bracket must be disposed of as infectious waste.**
- **Disinfect the reusable biopsy bracket before storing it.**

1.1.2 Labels and Symbols

The following table describes the important information of labels and symbols used on the equipment.

Table 1 Labels and symbols

Labels/symbols	Description
Tag	Tag includes the following information: ● The name and address of the manufacturer ● Date of manufacture ● Model and Serial Number ● Electrical rating (voltage, frequency)

Labels/symbols	Description
	Type BF applied part
	Important information concerning the safe operation
	Dangerous voltages
	Equipotentiality
	Alternating current
	Power on/ off switch
	USB port
	Ethernet connection
	Manufacturer
	Date of manufacture
	Serial number
	Refer to user manual/booklet
	Fragile, handle with care
	Keep dry
	Away from sunlight
	Keep facing up
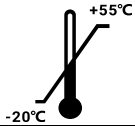	Temperature range (transport and storage)
	Warning hands pinching
	DO NOT operate the system in the presence of flammable anesthetics. Explosion may result.
	No heavy load on top

Labels/symbols	Description
	Not to be vertically stacked
	Indoor use only
	Waste electrical and electronic equipment
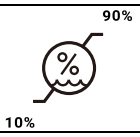	Relative humidity range (transport and storage)
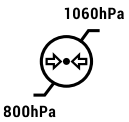	Atmospheric pressure range (transport and storage)
	Nonionizing electromagnetic radiation
	Chinese Environmentally Friendly Use Period symbol
	CE Mark of Conformity (Notified Body: UDEM, Turkey; Notified Body Number: 2292)

1.2 Application of Acoustic Power

Although it is generally believed that diagnostic ultrasound is safe, there are still studies confirming that there is a risk of damage when high-intensity ultrasound passes through body tissues. Therefore, the operator must follow the ALARA principle when using the ultrasonic diagnostic equipment and use the ultrasound with care.

1.2.1 ALARA

The guiding principle for the use of diagnostic ultrasound is defined by “ALARA principle” (As Low As Reasonably Achievable). That is, by keeping ultrasound intensity as low as possible while obtaining diagnostic images.

The ultrasound intensity depends on the acoustic intensity and time of exposure.

The ultrasound intensity required differs among application modes and animals.

Less ultrasonic power can only obtain low-quality images, which affects the reliability of the diagnosis; while using overdose ultrasonic power increases the risk of bioeffects.

Therefore, it is operator’s responsibility to reconcile ultrasonic power with diagnostic image quality. That is, to obtain qualified images while minimizing the ultrasonic bioeffects.

Warning **Special attention should be paid to the ALARA principle in reproduction exam, as any potential bioeffect can have a significant impact on the embryo or fetus.**

CAUTION

- **Operators should always follow the ALARA principle to ensure the image quality and keep the referencing index and exposure time at lowest level.**
- **It is important for operators to master the function of the system and observe the acoustic output referencing index reading all the time.**

1.2.2 Bioeffect

Ultrasound produces two types of bioeffects, thermal and mechanical.

1.2.2.1 Temperature Index (TI)

The TI informs the operator about the potential for temperature rise in body tissue. It is an estimate of temperature rise in body tissue with specific properties. And temperature rise is influenced by factors such as tissue type, vascularity, operation mode, and others.

There are three types of TI. The system only displays one index at a time. The operator should choose the appropriate index to display according to the actual application location:

- The soft tissue thermal index (TIS) is suitable for abdominal and cardiac applications. It indicates the potential temperature rise in homogeneous tissue.
- The bone thermal index (TIB) is suitable for reproduction (mid-late pregnancy) or pediatric (newborn head) applications. It indicates the potential temperature rise in bones or nearby soft tissue.
- The cranial thermal index (TIC) indicates the potential temperature rise in bones or nearby soft tissue.

1.2.2.2 Mechanical Index (MI)

The MI informs the operator about the possibility of mechanical bioeffects. It is an estimate of damage in body tissue due to cavitation.

The higher the MI value the greater the possibility of mechanical bioeffect result.

NOTE: When gas and soft tissue exist at the same time, special attention should be paid to setting the MI value to a lower level.

1.2.3 Output Display

The system displays two basic indices of Acoustic Output.

TI includes TIS, TIB and TIC. Each probe has a set of appropriate default options.

A TIS, TIB or TIC is displayed by probe and application mode chosen and the increment is 0.1 on the system.

The MI ranged from 0~1.9, the increment is 0.1.

A lower TI/MI index signifies a lower bioeffect. Operators should take TI and MI values as references when applying the ALARA principle.

1.2.4 Probe Surface Temperature

The surface temperature of the transducer should not exceed 43℃ to ensure the safety of animals.

1.2.5 Acoustic Power Control

The acoustic power can be controlled through three ways:

1.2.5.1 Direct Control

The direct control is to adjust the acoustic power by tapping **[<]** / **[>]** of **[A.Power]** on the touch screen.

The maximum value of acoustic output in any mode should not exceed the limit value of acoustic output (MI limit value is 1.9, $I_{spta.3}$ limit value is 720 mW/cm²).

1.2.5.2 Indirect Control

Indirect control is mainly performed by adjusting image parameters to control the acoustic power. Parameters that affect acoustic power include: imaging mode, probe and its frequency, position and number of focus, image depth, and PRF.

1.2.5.3 Receiver Control

The receiver control only affects the receiving mode of the ultrasonic wave, and does not affect the acoustic output while improving the image quality. The operator can optimize the image quality by adjusting the gain, TGC, and dynamic range to obtain effective diagnostic image with the minimum acoustic output.

Receiver control is recommended before direct control and indirect control.

Chapter 2 System Overview

2.1 Intended Use/Indications for Use

The Color Doppler Ultrasound System is intended for use by qualified clinicians or health care professionals for diagnostic ultrasound imaging and fluid flow analysis of the animal body, with the following indications for use: reproduction, abdomen, small parts, cardiology, vascular, and biopsy guidance.

The system is intended to be used in a hospital or medical clinic, and is applicable for feline (cats), canine (dogs), equine (horses), bovine (cows), ovine (sheep), and exotic animals.

2.2 Contraindications

None.

2.3 Model Comparison

Table 2 Model Comparison

Model	Configuration		
	Histogram	Profile	Spline
VU40	√	√	×
VU60	√	√	√

2.4 System Configuration

2.4.1 Standard Configuration

- Console
- Accessories
  - User manual*1
  - Warranty card*1 (with certificate of conformity)
  - Power cord*1

2.4.2 Optional Probes

Imaging probes used for exams may affect the RF emissions of the system.

The following probes have been tested in accordance with the requirements of the CISPR

11 and confirmed to meet the radiation standards of Group 1 Class A products.

Table 3 Optional Probes

No.	Probe Model	Nominal/ Testing Frequency (MHz)	Frequency Range (MHz)	Probe Type	Intended Use	Region Applied
1	3C5PDS	3.3/Gen	1.0-7.5	Convex Array	Cardiology, abdomen, reproduction, vascular, and small parts	Surface
2	C5-2D	3.3/Gen	1.0-7.5			
3	6C1PD	6.5/Gen	3.5-12.0	Micro Convex Array		
4	6C1PDA	6.5/Gen	2.5-13.5			
5	C11-3D	6.5/Gen	3.5-12.0			
6	7L4PDS	7.0/Gen	4.2-15.0	Linear Array	Abdomen, vascular, small parts, nerve, and musculoskeletal	Surface
7	L13-5D	7.0/Gen	4.2-15.0			
8	8L4PF	7.5/Gen	3.5-16.0			
9	10L2PD	10.0/Gen	4.2-16.0			
10	3P2PA	3.0/Gen	1.0-6.5	Phased Array	Cardiology	
11	P5-2D	3.0/Gen	1.0-6.5			
12	5P1PA	5.0/Gen	2.5-13.0	Phased Array	Cardiology and abdomen	Surface
13	5P1PAA	5.0/Gen	2.5-13.0			
14	P10-3D	5.0/Gen	2.5-13.0			
15	8P2MA	7.5/Gen	3.5-15.0			
16	P12-4D	7.5/Gen	3.5-15.0			
17	8P1PA	7.5/Gen	3.5-15.0			
18	6I6PD	6.5/Gen	3.5-12.0	Endocavity	Reproduction	Transrectal
19	EL12-3D	6.5/Gen	3.5-12.0			

2.4.3 Optional Accessories

Table 4 Optional Accessories

Optional Accessories (Replaceable Parts)	Service Life
Battery	About 500 times
Printer	About 5 years
Foot switch	About 2.5 years
Gel warmer	About 10 years
ECG lead	About 5 years
Barcode Reader	About 2 years
Probe	About 3 years
CD/DVD-RW drive	/
Wi-Fi adapter	/
Bluetooth adapter	/
Camera	/

2.5 System Components

2.5.1 Console

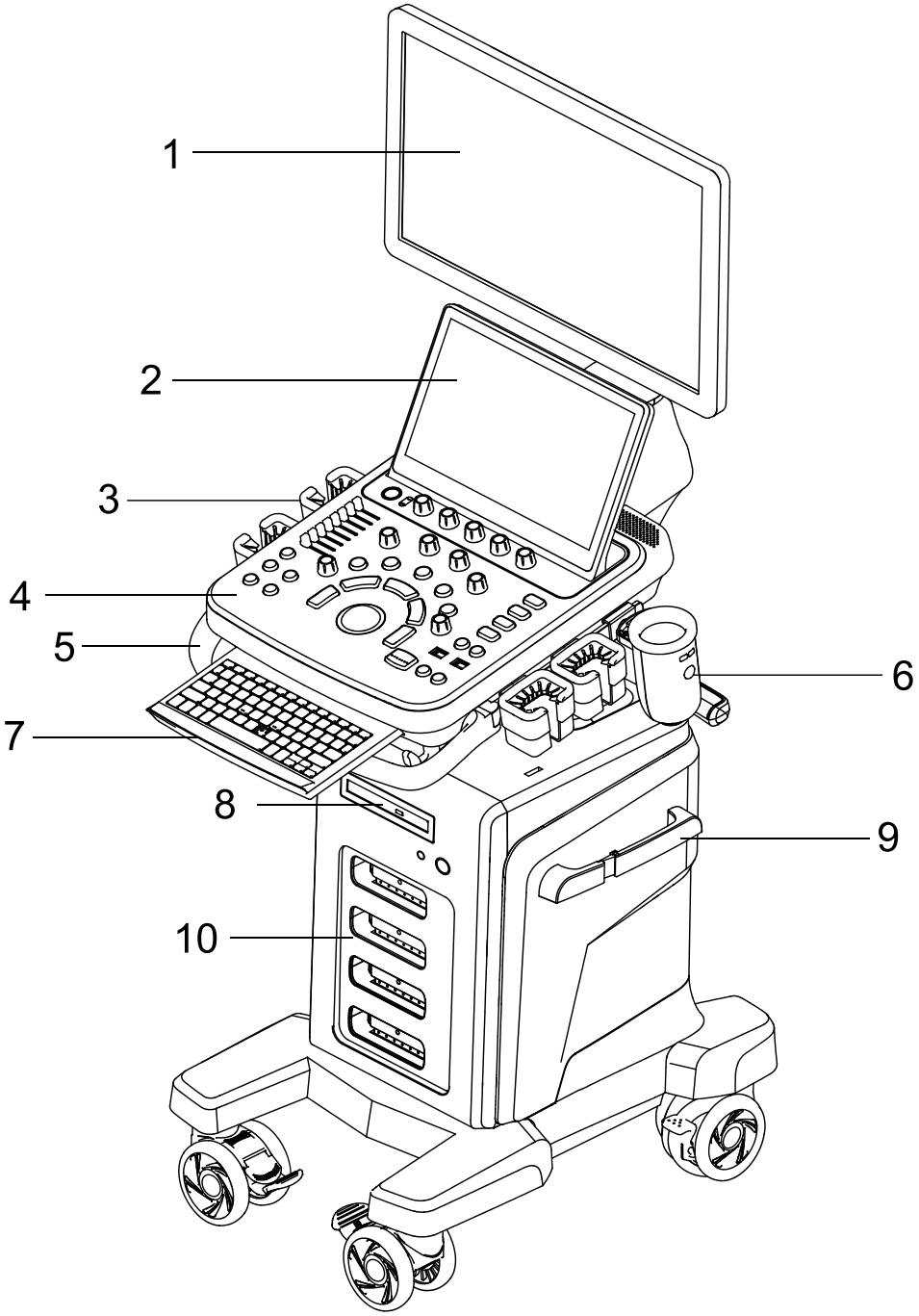

Figure 1 Front View

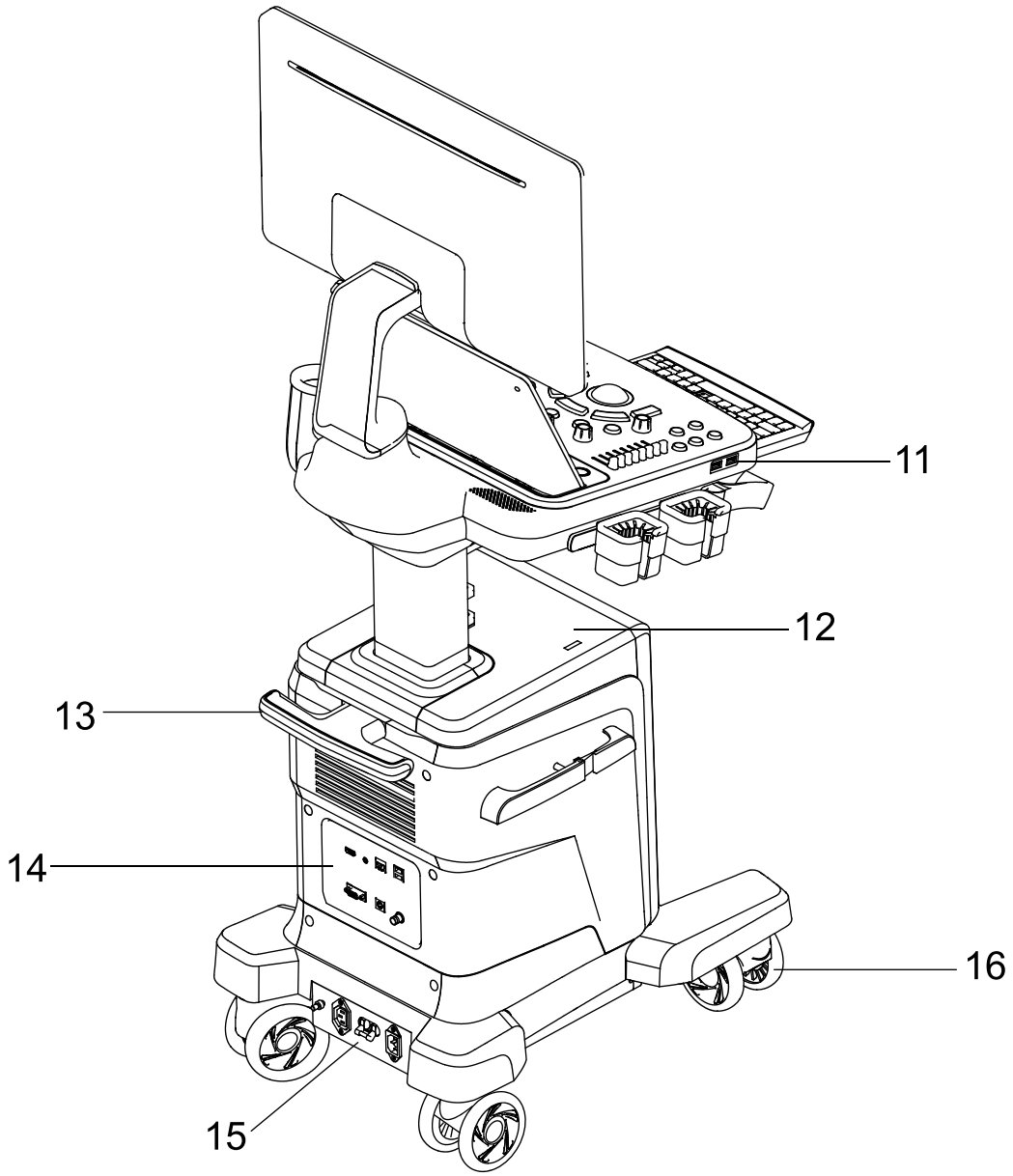

Figure 2 Back View

Table 5 Console

No.	Item	Function
1	**Monitor**	Display all user interfaces.
2	**Touch Screen**	Provide system human-machine interface to facilitate the operation and control.
3	**Probe Holder**	Used for fixing a probe.
4	**Control Panel**	Provide system human-machine interface to facilitate the operation and control.
5	**Front Handle**	Used for moving the system and adjusting the rotation angle of control panel.
6	**Gel warmer (optional)**	Used for warming the coupling gel.

No.	Item	Function
7	**Keyboard**	Used for text entering.
8	**CD/DVD-RW drive**	Used for backing up animal data and images. (Optional)
9	**Hanger**	Used for fixing cables.
10	**Front Panel**	Probe receptacles. Refer to “2.5.5 Front Panel” for details.
11	**USB Port**	Connects an USB device.
12	**Printer Storage**	Used for printer storage.
13	**Rear Handle**	Used for hanging the cable and lifting the system.
14	**I/O board**	Used for connecting peripherals and accessories. Refer to “2.5.6 I/O Board” for details.
15	**Power Supply Panel**	Electrical port panel. Refer to “2.5.7 Power Supply Panel” for details.
16	**Caster**	Used for moving or fixing the system.

2.5.2 Control Panel

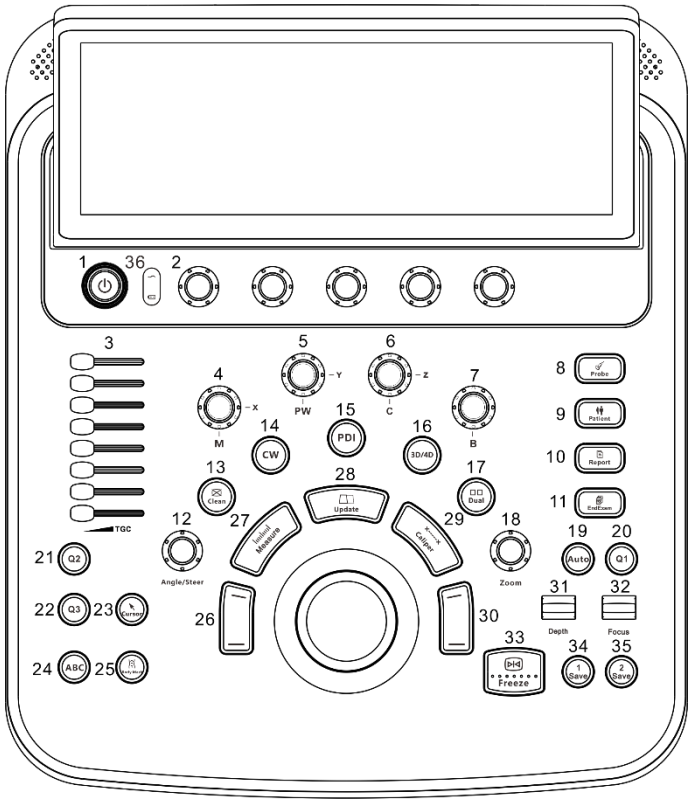

Figure 3 Control Panel

Table 6 Control Panel

No.	Icon	Description	Function
1	⏻	Power switch	Power on/ off the system.
2	/	Touch screen knob	Adjust the parameters corresponding to the touch screen.
3	**TGC**	TGC sliders	Move left and right to adjust depth gain.
4	**M**	M mode knob	Press to pre-activate M mode; double-press to enter M mode. Rotate to adjust gain in M mode.
5	**PW**	PW mode knob	Press to pre-activate PW mode; double-press to enter PW mode. Rotate to adjust gain in PW/CW mode.
6	**C**	Color mode knob	Press to enter Color mode. Rotate to adjust gain in Color/PDI mode.
7	**B**	B mode knob	Press to enter B mode. Rotate to adjust gain in B mode.
8	**Probe**	Probe/Exam switch button	Toggle probe and exam mode.
9	**Patient**	Animal information button	Enter / exit the Animal Information screen.
10	**Report**	Report button	Enter / exit the Report screen.
11	**EndExam**	EndExam button	End the current exam.
12	**Angle/Steer**	Angle/Steer knob	Press to switch angle/steer function, rotate to adjust angle/steer.
13	**Clear**	Clear button	Clear the measurement results, comments, traces, arrows, and body mark on the screen in reverse order.
14	**CW**	CW mode button	Press to pre-activate CW mode; double-press to enter CW mode.
15	**PDI**	PDI mode button	Press to enter PDI mode.
16	**3D/4D**	3D/4D button	Press to enter the 3D standby mode; press again to enter the 4D standby mode. (not applicable)
17	**Dual**	Dual display	Activate the dual display function. Or toggle between the two image states.
18	**Zoom**	Zoom knob	Rotate the knob to zoom in/out the full-ultrasound image. Press the knob and then rotate to zoom in/out local ROI box.
19	**Auto**	Auto button	Press to activate the Auto Optimization function.
20	**Q1**	Customize	User-defined button. You can customize its function

No.	Icon	Description	Function	
		Shortcut Button	depending on your needs.	
21	**Q2**	Customize Shortcut Button	Enter TDI mode by default. You can customize its function depending on your needs.	
22	**Q3**	Customize Shortcut Button	User-defined button. You can customize its function depending on your needs.	
23	**Cursor**	Cursor button	Display or hide a cursor.	
24	**ABC**	Text button	Activate / exit text function.	
25	**Body Mark**	Body Mark button	Activate / exit body mark function.	
26		Left set button	Press to confirm the operation.	
27	**Measure**	Measure button	Activate / exit application measurement and calculation functions.	
28	**Update**	Update button	In M pre-activation mode, press this button to switch to B+M mode. In the B+PW/B+CW mode, press this button to switch between the PW/CW image and the B mode image.	
29	**Caliper**	Caliper button	Activate / exit general measurement function.	
30		Right set button	Press to confirm the operation.	
31	**Depth**	Depth slider	Move up and down to adjust the imaging depth.	
32	**Focus**	Focus slider	Move up and down to adjust the focus position.	
33	**Freeze**	Freeze button	Press this button to freeze the current image and press again to resume real-time status.	
34	**Save 1**	Image save button	Press this button to save the current frame image by default. You can customize its function depending on your needs. Refer to “4.2.5 Customize” for details.	
35	**Save 2**	Cine save button	Press this button to save the set cine by default. You can customize its function depending on your needs. Refer to “4.2.5 Customize” for details.	
36		Power indicator	~	External power indicator: Lights up green when connected to an external power source; turns off when disconnected.
				Battery status indicator: Lights up orange when charging, green when fully charged; turns off when not charging or when there is no battery.

2.5.3 Trackball

Use the trackball and **[Set]** button to control the screen directly and easily.

Function	Description
Move	Roll the trackball to move the cursor.
Click / Select	Use the trackball to move the cursor over the item, image, or annotation you want to select and press the **[Set]** button.
Drag	1) Click the image, or annotation you want to move and press the **[Set]** button. 2) Roll the trackball to move the image or annotation to the desired location. 3) Press the **[Set]** button again.
Adjust ROI	1) Roll the trackball to adjust the size of ROI frame. 2) Press the **[Set]** button.

2.5.4 Keyboard

The keyboard is located under the control panel.

Eject the keyboard: Press the keyboard edge in and let go, the keyboard will pop up automatically, pull the keyboard out until it clicks to fix the keyboard.

Close the keyboard: push the keyboard in until it clicks to secure the keyboard.

The keypad consists of numbers, letters and function keys for text entering, which is the same as the computer keyboard.



Figure 4 Keyboard

Table 7 Keyboard Description

No.	Key	Function
1	**Esc**	Back to Home screen.
2	**Help**	Open / close accompanying help documents. (Reserved function)
3	**Station**	Enter / exit the Station screen. In addition to this button, users can also customize a button for entering/exiting the Station screen. For details, please refer to "4.2.5 Customize".

No.	Key	Function
4	**Setup**	Enter / exit System Setup screen.
5	**Q4~Q8**	User–defined keys.
6	**FZoom**	Activate / toggle / exit full-screen zoom function.
7	**ECG**	Activate / exit ECG function.
8	**Biopsy**	Activate / exit biopsy function.
9	**QSave**	Save the current image parameters as a preset for the next exam.
10	**1~9**	Number key.
11	**Tab**	Jumps to next menu item.
12	**Caps Lock**	Toggle between uppercase and lowercase.
13	**Shift**	Key combination. Used together with other keys.
14	**Ctrl**	Key combination. Used together with other keys.
15	**Fn**	Key combination. Used together with other keys.
16	**Alt Gr**	Key combination. Used together with other keys.
17	**Del**	Delete the character after the cursor.
18	**A~Z**	Character key.
19	**Space / Text**	Insert a space / activate comments.
20	**Body Mark**	Activate / exit body mark function.
21	**Arrow**	Activate / exit arrow annotation function.
22	↑←↓→	Move the cursor position by character.
23	**Enter**	Move the cursor to the next line of text or the input box.
24	**Special character**	Special character key.
25	**Back**	Delete the character before the cursor.
26	**Delete Text**	Delete all text annotations on the screen.

2.5.5 Front Panel

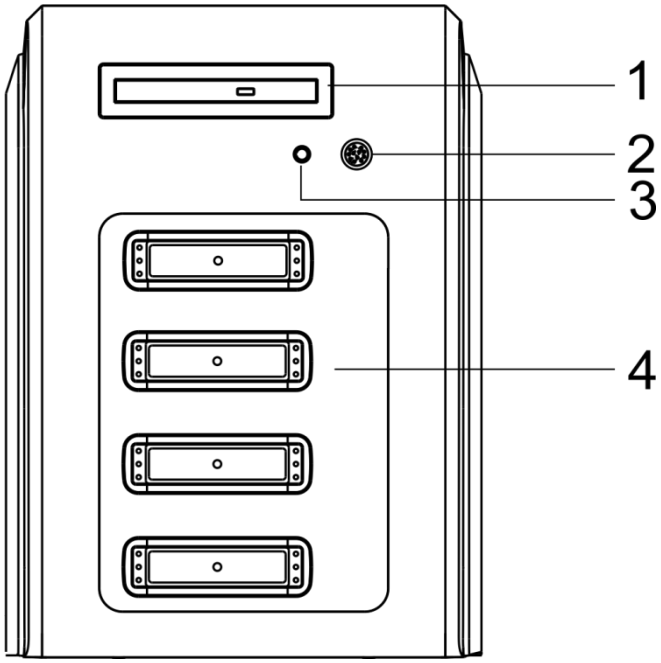

Figure 5 Front Panel

Table 8 Front Panel Description

No.	Name	Function
1	**CD/DVD-RW drive**	Used to back up animal data and images. (Optional)
2	**ECG lead port**	Used to connect the ECG cable.
3	**Pencil probe port**	Used to connect pencil probe. (Reserved)
4	**Probe receptacles**	Used to connect ultrasonic probes.

2.5.6 I/O Board

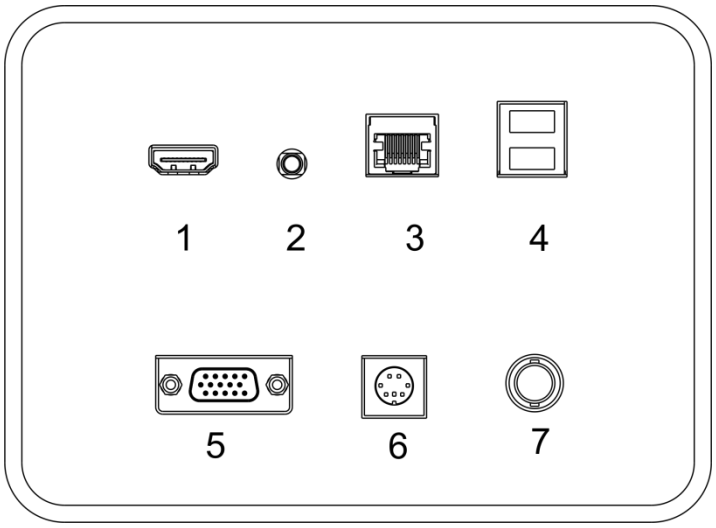

Figure 6 I/O Board

Table 9 I/O Board Description

No.	Name	Note
1	**HDMI**	Compatible equipment must comply with EN 60601-1
2	**Printer remote control**	Sony UP-25MD, Sony UP-X898MD or other printers that comply with EN 60601-1 standards
3	**Network port**	/
4	**USB port**	USB flash drive: Sandisk GZ600 or other products that comply with CE standards Foot switch: KACON/HRF-M2Y-U Barcode reader: C520
5	**VGA port**	Compatible equipment must comply with EN 60601-1
6	**S-VIDEO output**	Compatible equipment must comply with EN 60601-1
7	**VIDEO output**	Compatible equipment must comply with EN 60601-1

NOTE:
- **S-VIDEO port is recommended.**
- **To ensure image quality, make sure that the resolution of the external video output device (HDMI/VGA) is 1920*1080.**

2.5.7 Power Supply Panel

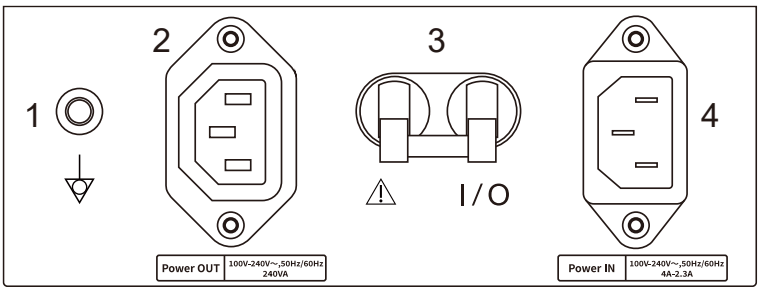

Figure 7 Power Supply Panel

Table 10 Power Supply Panel

No.	Name	Description
1	**Equipotentiality**	Equipotential terminal.
2	**Power outlet**	AC power output port.
3	**Circuit breaker**	Turn on/off the power supply.
4	**Power inlet**	AC power input port.

Chapter 3 Preparing the System

3.1 Moving the system

Care must be taken when moving the system and the specifications of this section must be strictly followed.

3.1.1 Transporting

When transporting the system, make sure the packaging is in good conditions and follow the precautions below:

NOTE:

- **Strictly comply with the graphic symbols on the packaging when transporting the system by vehicle.**
- **The delivery vehicle must be a van.**
- **Do not stay in the sun, rain or snow without any covering when loading or unloading the system.**
- **DO NOT transport the items which may damage the system together. DO NOT put any heavy items on the packaging.**
- **When using a vehicle for transportation, make sure that the vehicle can bear the system as well as the passenger's weight.**
- **If lifting equipment is used, make sure that the load capacity of the lifting equipment can bear the weight of the system. (With all components, the weight of the system is about 65kg)**

3.1.2 Moving

To move the system, perform the following steps:

1. Before moving the system, make sure that the system is powered off and the power cord is unplugged.
2. Properly fix all cables, probes and accessories to prevent tripping hazard when moving the system.
3. Unlock the casters.
   - Step on the **[ON]** pedal to lock the casters. The system cannot be moved.
   - Step on the **[OFF]** pedal to unlock the caster. The system can be moved flexibly.
4. Firmly hold the rear handle of the system with two hands when moving the system.

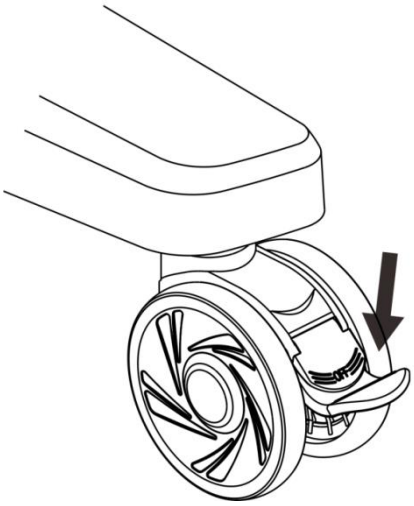

Figure 8 Lock the casters

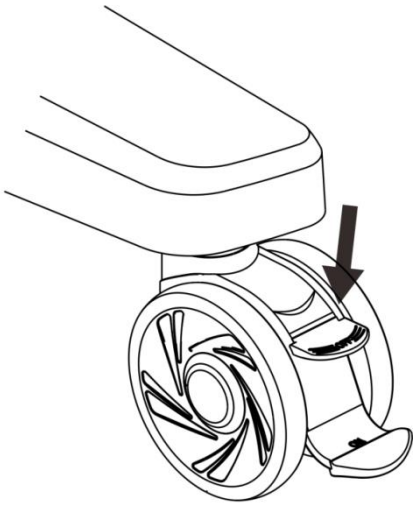

Figure 9 Unlock the casters

Warning **Failing the system as described above may lead to a tipping hazard, causing possible animal or operator injury and damage to the system.**

NOTE:

- **Avoid passing slopes over 10°. If have to, need to be moved by two people. Always moving the system with the rear handle.**
- **If necessary, use the rear handle of the console to lift the system gently instead of lifting the system directly.**
- **Before moving the system, please check the casters for obvious damage or poor rotation.**

3.2 Positioning

To position the system, perform the following steps:

1. Position the system on a level, anti-slip surface. Leave at least 20 cm of space on the back and left and right sides of the system.
2. Properly place all power cords and cables to prevent tripping hazard.
3. After positioning the system at a proper place, lock the casters to prevent a slip hazard.

Warning **DO NOT place the system on a slope or a slippery surface to prevent a tipping hazard which causes possible animal or operator injury and damage to the system.**

3.3 Connecting the System

The system supports external power supply and battery power supply. Normally, it is recommended to work with an external power supply. In special cases, such as sudden power failure or easy system movement, battery power supply is preferred.

3.3.1 External Power Supply

The system power must be supplied from a properly rated outlet as described on the Power Supply Panel.

To connect external power supply, perform the following steps:

connect the power inlet of the power Supply Panel and a hospital grade grounded power outlet with the power cord.

3.3.2 Battery Power Supply

Warning

- **Battery can only be disassembled or installed by professionals. Battery replacement by personnel without adequate training can result in fire or explosion hazards caused by over-temperature. Disassembly and assembly by user will void the warranty. If the battery fails or needs to be replaced, please contact the manufacturer or your sale representative.**
- **If you do not use the system for a long time in battery mode, please shut down the system. Frequent charging and discharging will impact the service life of batteries.**

3.3.2.1 Battery Charging and Use

The battery is a rechargeable lithium-ion battery.

When an external power source is connected, the battery will be charged automatically when the battery power is not full.

The system switches to battery power supply automatically when external power source is removed. Fully charged battery will give about 1 hour of use.

3.3.2.2 Battery Status

Battery status is indicated by icons on the status bar.

Table 11 Battery Status Icons

Icon	Description
	Battery level 80%~100%
	Battery level 60%~80%
	Battery level 40%~60%
	Battery level 20%~40%
	Battery level 10%~20%
	Battery level below 10%
	Charging

When the battery power is 10%, a system prompt will be displayed, which disappears after

5 seconds.

When the battery power is 5%, a system prompt will be displayed. Click **[OK]** or **[Cancel]** to hide the prompt.

3.3.2.3 Battery Maintenance

It is recommended to perform a complete discharge/charge cycle when the battery is used for the first time or not used for more than 3 months.

To perform a complete discharge/charge cycle:

1. Allow the battery to discharge completely until the system turns off.
2. Full charges the battery.
3. Repeat step 1~2 if necessary.

3.3.2.4 Battery Recycling

Replace and properly recycle the battery when it is obviously damaged or exhausted. Follow the corresponding regulations when disposing of the used batteries.

3.4 Power On/ Off the System

3.4.1 Power on

CAUTION:

- **Do not power on the system without probe connected.**
- **If an abnormal power interruption occurs during the last system operation (such as a sudden interruption of AC power), you may have to wait longer 30~60s than usual to reboot the system.**
- **System can be rebooted 5 minutes later of power off. Otherwise system failure may result.**

NOTE:

- **First power-on is recommended to be done by the authorized personnel.**
- **Make sure that the power cord is connected to the system and fully plugged into an appropriate grounded power rating outlet.**
- **Do not place the system in a location where it is difficult to disconnect the power supply plug.**

To power on the system, perform the following steps:

1. Push up the circuit breaker located on the Power Supply Panel to connect power supply.
2. Press the power switch "⏻" located on the upper right section of the control panel to startup the system and the power indicator lights up.
3. A boot screen appears, and the Home screen displays after startup.
4. After initialization has been completed, refer to the following items for startup check. If there is any abnormality, please contact your sales representative or

the customer service department of the manufacturer.

Table 12 Checking List

No.	Item
1	Abnormal sound, smell, or overheating.
2	Error massage.
3	Discontinuous display or abnormal dark area on the 2D image.
4	When the probe is connected to the system, monitor that the surface temperature of the probe all the time to avoid abnormal heat that may burn the animal.
5	The buttons and knobs of the control panel are fully functional.
6	The system time displays correctly.

3.4.2 Power off

To shut down the system, perform the following steps:

1. Press the power switch "⏻" located on the upper right section of the control panel.
2. A confirmation prompt pops up, select **[Shutdown]** to power off the system.
3. When the power indicator lights out, the shutdown is completed.
4. Remove the plug from the wall outlet as needed.

CAUTION:

- **Never attempt to shut down the system while the system is in an upgrade or data transfer process.**
- **DO NOT remove the USB device or shut down the system during software upgrade.**
- **End the current exam before shutting down the system.**
- **DO NOT cut down the power before the shutdown procedure is completed. Files damaged and animal data loss may result.**

NOTE:

- **If the system fails to shut down normally, unplug the power cord to force the system to shut down.**
- **It is not recommended to power off the circuit breaker or to remove the power plug directly, as this may cause damage or loss of animal data.**
- **If the system is not used for a long time, disconnect the external power supply and turn off the circuit breaker, disconnect all peripheral equipment after shutting down the system.**

3.4.3 Screensaver

Without any operation for a period of time, the system will enter the screen saver. You can customize screensaver settings, including the waiting time before entering the screen saver.

Setting path: **[Preset]** (press **<Setup>**) → **[System Preset]** → **[General]** → **[System**

Screensaver], refer to “4.2.2 General” for details.

3.5 Mechanical Adjustment

Before starting the exam, you can adjust the monitor, control panel, and touch screen for easy viewing.

NOTE:
- **Lock the caster before mechanical adjustment.**
- **Be careful to prevent crushing your hands when making the mechanical adjustment.**

3.5.1 Adjust the Monitor

The horizontal angle and vertical angle of the monitor can be adjusted. The display parameters of the monitor can also be adjusted for optimal display performance.

3.5.1.1 Adjust the Horizontal Angle

Grab the edge of the monitor with two hands and rotate the monitor horizontally.

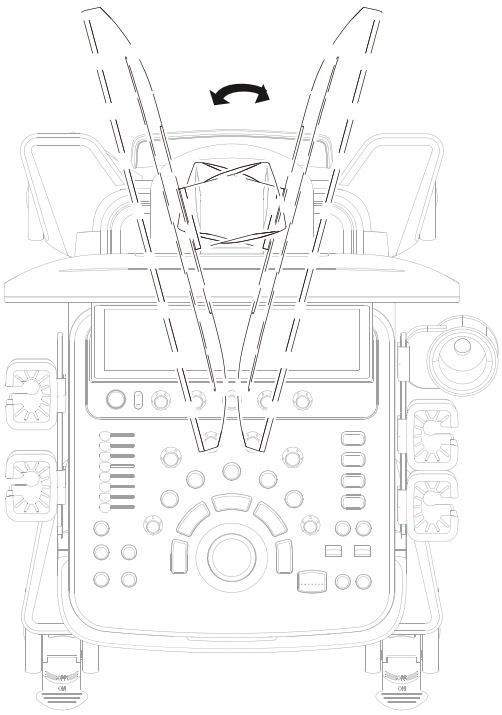

Figure 10 Adjust the Horizontal Angle

3.5.1.2 Adjust the Vertical Angle

Grab the top and bottom of the monitor with two hands and tilt the monitor up and down.

NOTE:
- **Be careful to prevent crushing your hands when adjusting the monitor.**
- **When transporting or moving the system, tilt the monitor to the horizontal position to avoid damage to the screen.**

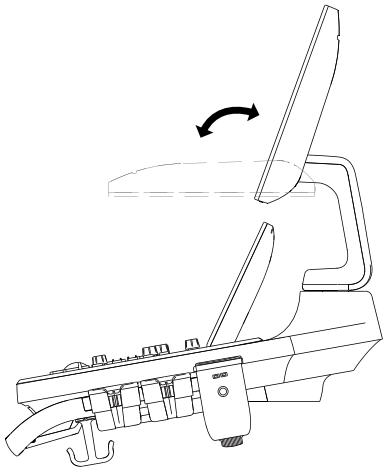

Figure 11 Adjust the Vertical Angle

3.5.1.3 Adjust Brightness and Contrast

Monitor's brightness and contrast are two of the most important factors for proper image quality.

NOTE: Do not turn off the monitor during use, as this may result in loss of animal data and need to reboot.

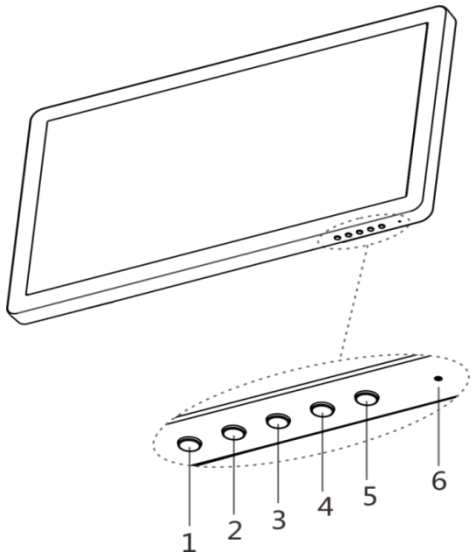

Figure 12 Monitor Control Button

Table 13 Monitor Control Button

No.	Description	No.	Description
1	Menu	2	Enter /Exit
3	Contrast /Decrease	4	Brightness/ Increase
5	Power On/ Off	6	Status Indicator

- **Contrast Control**

1. Press **[3]** to activate the contrast control and the contrast bar is displayed in the lower right corner of the screen.
2. Press **[3]** to decrease the contrast or **[4]** to increase the contrast.
3. Press **[2]** to exit the contrast control.

➢ **Brightness Control**

1. Press **[4]** to activate the brightness control and the brightness bar is displayed in the lower right corner of the screen.
2. Press **[3]** to decrease the brightness or **[4]** to increase the brightness.
3. Press **[2]** to exit the brightness control.

➢ **Other Parameters**

Press **[1]** to open the parameter menu.

NOTE:
- **Adjust the brightness prior to the contrast.**
- **After readjust the monitor's brightness and contrast, readjust all preset and peripheral settings.**

3.5.2 Adjust the Control Panel

3.5.2.1 Adjust Angle

Grab the rear handle with two hands and rotate the control panel horizontally.

3.5.2.2 Adjust Height

1. Press the button located inside the front handle, left button for rise while right button for down.
2. Release the button at the appropriate height.

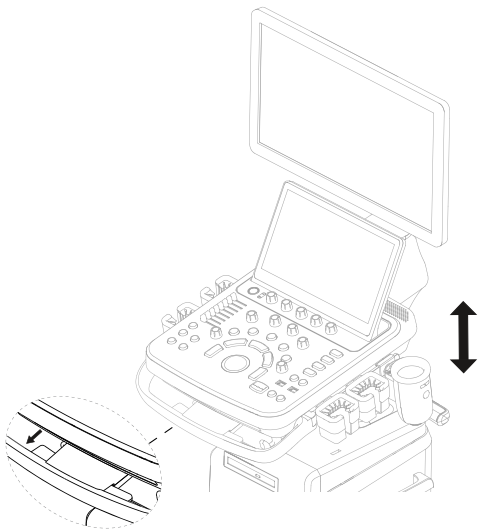

Figure 13 Adjust Height

3.5.3 Adjust the Touch Screen

Hold the top and bottom of the monitor with two hands and tilt the touch screen.

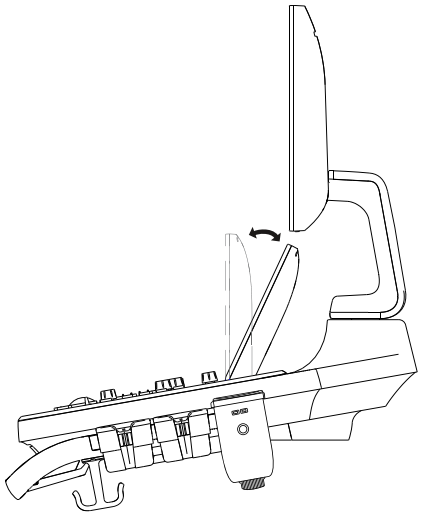

Figure 14 Adjust the Touch Screen

3.6 Connect / Remove the Probe

Warning

- **Before connecting or removing the probe, freeze the image or shut down the system power, otherwise the system and probe damage may result.**
- **Use only probes provided by manufacturer. Using other probes may damage the system and probes and cause unpredictable accidents or malfunctions.**
- **Before connecting the probe, make sure that the surface, cable and socket of the probe are without cracks or any failure. Electrical shock may result if a defective probe has been used.**
- **Before connecting or removing the probe, place the probe in the probe holder and fix the probe cable to prevent the probe from accidentally falling.**

3.6.1 Connect the Probe

To connect a probe, perform the following steps:

1. Turn the locking handle on the probe connector counterclockwise.
2. Keep the probe cable to the right and carefully insert the probe connector into the probe receptacle completely.
3. Turn the locking handle clockwise to lock in place.

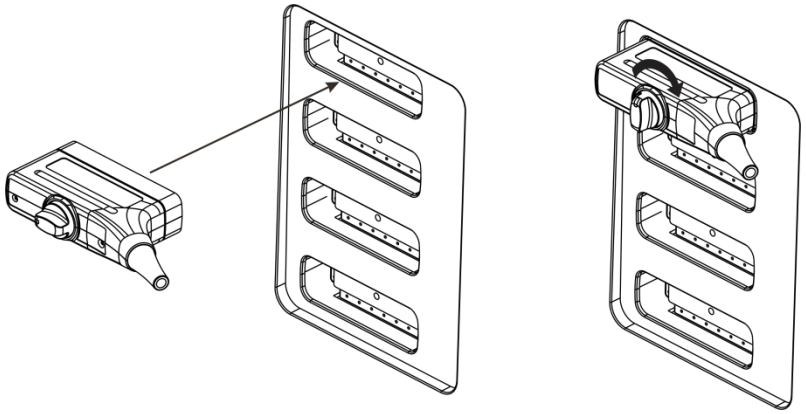

Figure 15 Connect the Probe

3.6.2 Remove the Probe

To remove the probe, perform the following steps:

1. Turn the locking handle counterclockwise to unlock the probe connector.
2. Pull the probe connector straight out of the probe receptacle.

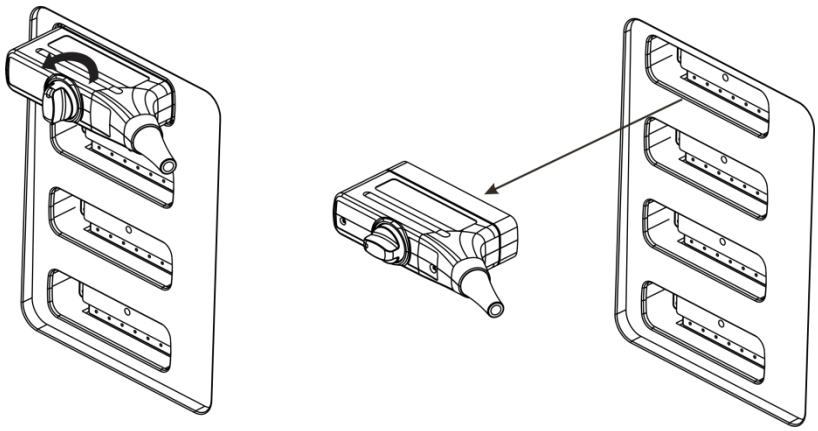

Figure 16 Remove the Probe

3.7 Install the Gel Warmer

Gel warmer is an optional accessory for heating 250 ml of ultrasonic coupling gel to 37℃ or 40°C.

Perform the following steps:

1. The warmer’s power ports are located at the bottom of both sides of the control panel. Pull out the plug, and connect the power cord of the warmer to the power port of the bottom.
2. Push and fix the warmer into the probe bracket nearby.

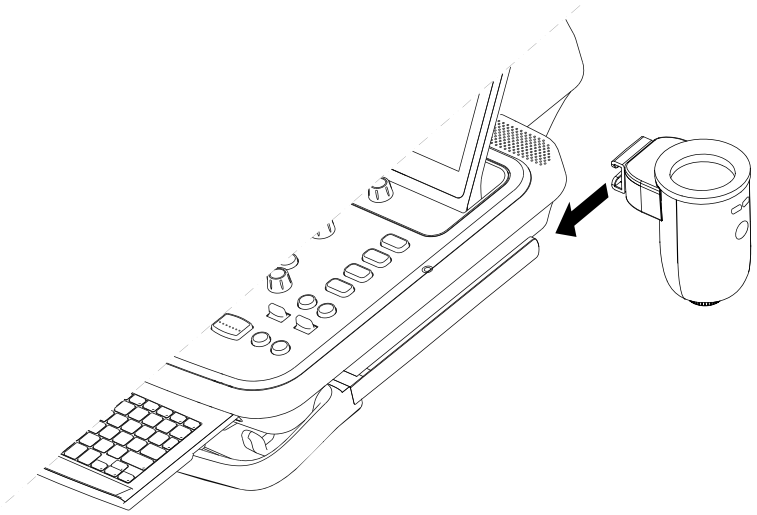

Figure 17 Install the Gel Warmer

3. Press and hold the warmer's power button for more than 1 second to turn on the gel warmer, and the corresponding temperature indicator lights up in green. The coupling gel is heated to 37℃ by default.
4. Short press the warmer's power switch to toggle the heating temperature between 37℃ and 40℃.
5. Place the 250ml ultrasonic coupling gel into the warmer for heating.
6. Press and hold the warmer's power button for more than 1 second to turn off the gel warmer after use.

3.8 Foot Switch

Foot switch is an optional accessory. Preset its function before use.

Setting path: **[Preset]** (press **<Setup>**) → **[System Preset]** → **[Customize]**, refer to "4.2.5 Customize" for details.

Operation: Connect the foot switch to the system via USB port, and step on the foot switch to perform the corresponding operation.

3.9 Connect the Network

NOTE: To ensure the network security of the system, DO NOT connect any external network when using the system normally.

To connect the network, perform the following steps:

1. Connect the network port of the peripheral connector board and the local LAN port with network cable.
2. Set up the local network.

- Setting path: **[Preset]** (press **<Setup>**) → **[Network Preset]** → **[Local TCP/IP]**, refer to “4.7 Network Preset” for details.

3. Check the network connection status by the screen status bar.
   - means successful network connection.
   - means failed network connection, try to connect again.
   - Place the cursor on the network icon to automatically display the network information.

3.10 Connect Peripheral Device

3.10.1 Connect USB Device

➢ **To connect a USB device:**

1. Insert the USB device into the USB port.
2. After initialization, “ ” displays on the status bar.

➢ **To remove a USB device:**

1. Move the cursor over the “ ”, press the **[Set]** button.
2. Select the USB storage device to be removed in the pop-up dialog box and click **[OK]** to remove the USB device safely.
   - If the USB device is in the middle of a transfer, the system will prompt: “The USB device is in use, please wait until the task is complete to uninstall.”

Warning

- **Do not use USB storage devices with unsafe data, otherwise system damage may result.**
- **Remove the USB device safely. Direct removal may damage the USB device and the system.**

3.10.2 Connect Printer

3.10.2.1 Connect Digital Printer

This section takes the HP OfficeJet Pro 8210 as an example. For the connection details for other models of printers, please refer to the printer manual.

To connect to a digital printer, perform the following steps:

1. Connect the medical power supply and the printer with the power cable of the printer.
2. Connect the system to the printer using a USB cable or by joining the same network.
3. Add print service to the printer.
   1) Press **<Setup>** key to enter the Preset screen. Click **[Print Preset]** to enter print setting screen.

2) Click **[Add Service]** to add print service to the printer.

3) Enter the printer service name, select the printer service type, and click **[OK]**.

4. Install the printer driver.

1) The set print service is displayed in the print service list; select the service by pressing **[Set]** button.
2) Click **[Add Printer]** and a dialog box pops up.
3) The printer driver path for the connected device will be displayed by URL. Select the desired printer driver and then enter the printer name.
4) Click **[OK]** to install the driver.

Warning **When using multiple peripherals that are not powered by the auxiliary output of the system, it must be ensured that the total leakage current of the peripherals and the system meets the medical equipment electrical safety standards in relevant areas.**

3.10.2.2 Connect Thermal Printer

Please refer to the printer manual for installation details.

Once the printer is connected successfully, you can use it after relevant settings.

NOTE: For ease of use, it is recommended that the thermal printer be placed in the printer storage box that comes standard with the system.

3.10.2.3 Connect DICOM Printer

Once the system is connected to the DICOM server and the DICOM print server has been set up, animal images can be printed remotely. Refer to “11.2.2 DICOM Print” for details.

3.10.2.4 Precautions for Printer

- If any liquid or solid fall into the printer, please stop the operation immediately. Unplug the printer and refer to professional personnel.
- If you do not use the printer for a long time, please unplug the plug from the socket.
- Do not disassemble the printer housing. Only professional personnel can carry out maintenance.
- When the printer is loaded with printing paper, do not move or handle the printer, otherwise it may cause printer failure.
- To prevent internal overheating, leave enough space (at least 10 cm) around the printer.

3.11 ECG

This system supports the ECG function, which is used to collect ECG signals synchronized with ultrasound images during ultrasound exams (mainly cardiac exams). ECG cannot be used for diagnosis or monitoring.

Warning

- **ECG cannot be used for cardiac surgery.**
- **Motivated device may affect ECG signals.**
- **Check the ECG leads before operation to ensure that the ECG leads is in conditions. Otherwise, electric shock may result.**
- **Be sure to connect the ECG electrode correctly. Do NOT use ECG leads that are not provided by the manufacturer. Otherwise, electric shock may result.**
- **When connecting the ECG electrode, connect the ECG cable and the ECG lead before placing the ECG electrode on the animal. Otherwise, the animal may get an electric shock.**
- **Do not directly touch the animal's heart with the ECG electrode; otherwise the animal's heartbeat may stop.**
- **If a defibrillator must be used, there must be no ECG adhesive electrode and conductive adhesive before removing the defibrillator electrode.**

3.11.1 ECG Operation

Perform the following steps:

1. Connect the device.
   1) Shut down the system and connect the ECG cable to the ECG lead port.
   2) Power on the system.
   3) Attach the ECG electrode clips to the animal’s body as shown in the following figure.

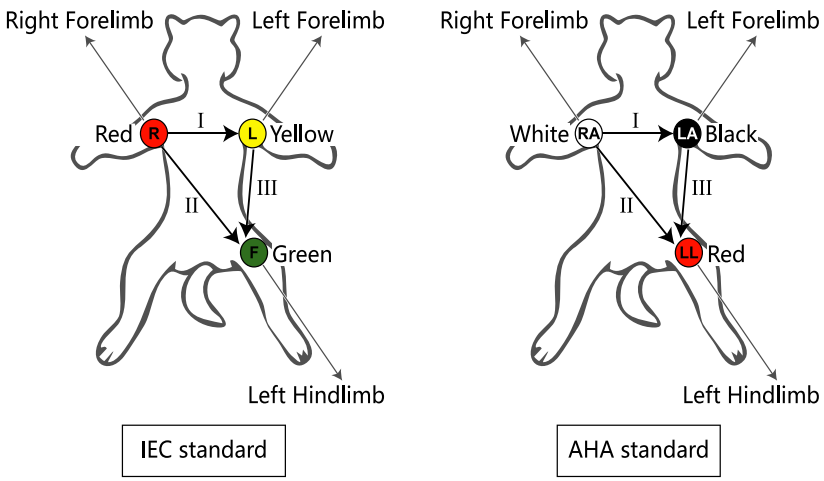

2. Press the **<ECG>** key on the keyboard to enter the ECG operation screen. The ECG signal will be displayed. Adjust the corresponding parameters to obtain the best image scanning effect.
3. Freeze the image and observe the replay image and waveform.
4. Press the **<ECG>** key to exit ECG screen.

3.11.2 ECG Maintenance

- ECG cables do not require special maintenance, but should be used with care.
- Damaged cables should be replaced promptly.
- Use the electrodes and cables as described.
- Necessary repairs or replacements can only be performed by authorized personnel.

3.12 Barcode Reader

NOTE: Before scanning code with the barcode reader, please click on the input box for the scan content (e.g. animal ID, keyword).

Barcode Reader is an optional accessory for scanning animal ID.

Operation: Connect the barcode reader to the system, enter the animal information screen, delete the existing animal ID, press the button on the reader to scan the corresponding barcode, and the animal ID displays. Users can set up the scanning content to match the animal information fields, see "4.2.7 BarCodes" for details.

3.13 Screen

3.13.1 Home Screen

The system enters the Home screen by default after power-on.

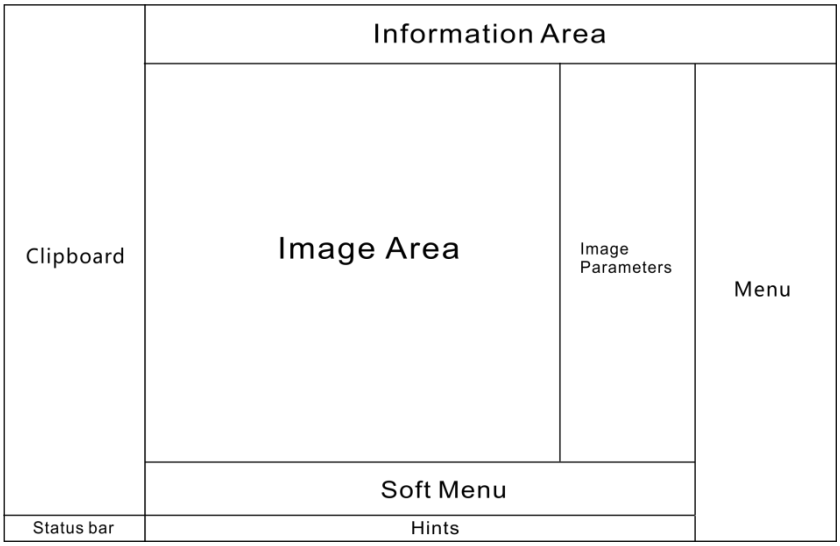

Figure 18 Home Screen

Table 14 Home Screen

Functional Area	Description
Information Area	The information area is located at the top of the Home screen. This area displays information such as LOGO, hospital name, physician, animal information, exam date, current probe model and current exam mode, etc.

Functional Area	Description
Image Area	The ultrasound image area is located in the center of the Home screen. This area displays real-time ultrasound images, probe marks, coordinate axes, focus positions, gray scale bars, and color bars of each exam mode. The parameters such as acoustic power, mechanical index and thermal index are displayed on the upper left of the image area. The cine replay progress bar is displayed under freeze state. The corresponding annotation information is displayed when the text/body mark/arrow annotation functions are activated. The measuring scale is displayed when the measure function is activated.
Image Parameter	The image parameter area is located on the right side of the image area. This area displays the real-time parameters of current mode.
Menu	The menu is located on the right side of the Home screen. This area displays different menus for different screens, including but not limited to image menu, measurement menu, annotation menu and body mark menu.
Soft Menu	The soft menu is located at the bottom of the Home screen. This area displays the options of the current mode and synchronizes the options to the touch screen.
Hints	Display prompt information, help information, or progress status of the current screen.
Status bar	Display icons for current system status, including battery level, power status, network connection status, input method, recycle bin, USB devices, and storage status, etc.
Clipboard	Display a thumbnail of the stored picture under the current exam.

3.13.2 Touch Screen

The touch screen is mainly used to adjust image parameters, switch probes or exam modes, or used as a control interface to facilitate some basic functions.

CAUTION:

- **Always operate the system in a stable environment. A sharp temperature or humidity change may cause malfunction of the touch screen.**
- **DO NOT touch the touch screen with sharp or hard objects.**
- **DO NOT expose the touch screen to high voltage or static electricity.**
- **DO NOT expose the touch screen directly to the sun.**
- **Use your fingers to operate the touch screen and avoid putting too much pressure on the touch screen.**
- **Keep the screen clean and DO NOT stick tape on the touch screen.**

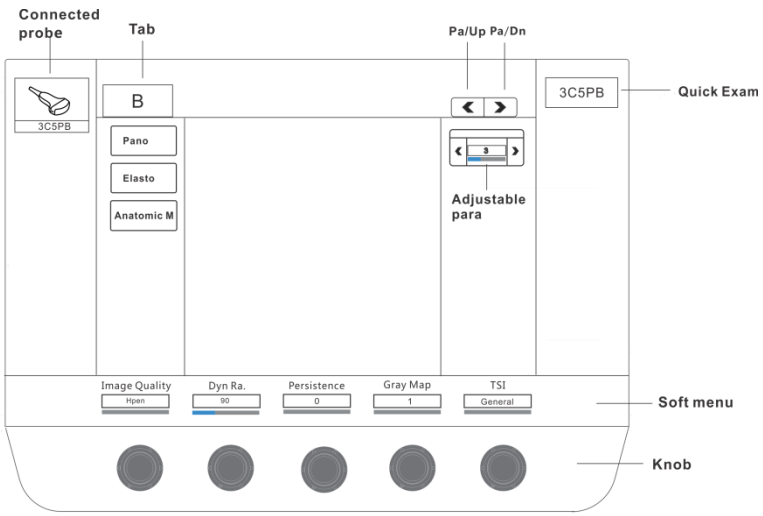

Figure 19 Touch Screen

Table 15 Touch Screen

Functional Area	Description
Connected probe	Display connected probe for quick switch.
Tab	Tap the corresponding tab on the touch screen can easily switch the corresponding screen or mode.
PaUp / PaDn	Tap to scroll up and down to display all items.
Adjustable Parameters	● If there is an adjustable parameter of menu item, tap **[<]** / **[>]** to adjust its value. ● If there is no adjustable parameters of menu item, tap the menu item to activate or enter the submenu; tap again to exit its function or submenu.
Quick Exam	Display most frequently or recently used exam modes (up to 7) for quick switching.
Soft Menu	Display the soft menu items of the Home screen synchronously.
Knob	Rotate the corresponding knob on the control panel to adjust the parameter.

Chapter 4 System Settings

4.1 Overview

This section details the access to configuration and service functions of the system. Customize your system to facilitate operation.

Item	Description
Enter the Preset screen	Press the **<Setup>** to enter the Preset screen.
Tab	Move the cursor over the tab and press the **[Set]** button to enter the corresponding setting screens.
Select an Item	Move the cursor over a setting item; press the **[Set]** button to select the item.
Text Box	Select the text box, enter text and numbers directly.
Drop-Down Box	Click the drop-down box to display all the sub-options under the current option.
Check box	Check the check box to activate corresponding option.
Save	Click to save current settings and return to the Home screen.
Cancel	Click to cancel all modifications and return to the Home screen.
Exit the Preset screen	In the Preset screen, press **<Setup>** again or click **[Cancel]** to cancel all modification and exit the Preset screen. In the Preset screen, click **[Save]** to save all modification and exit the Preset screen.

4.2 System Preset

4.2.1 Region

The Region tab is the default page of the Preset screen.

Open the Region tab via **[Preset]** (press **<Setup>**) → **[System Preset]** → **[Region]**. This tab is access to related information settings, such as hospital information, system language, and system time.

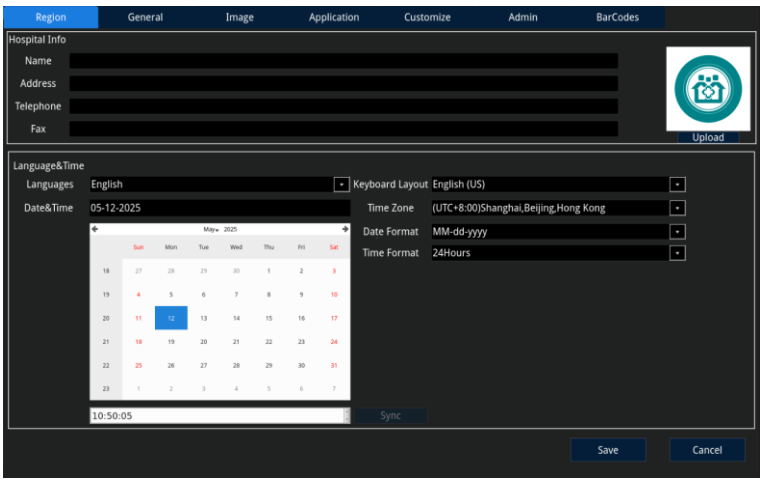

Figure 20 System Preset-Region

Table 16 System Preset-Region

Item		Description
Hospital Info	**Name**	Hospital Name.
	Address	Hospital Address.
	Telephone	Hospital telephone.
	Fax	Hospital Fax.
	Upload hospital logo	Click **[Upload]**, a dialog box pops up. Select the picture you want to upload, and click **[OK]**. After the upload is completed, the logo is displayed in the Logo area. This logo will be displayed in the Report review screen.
Language & Time	**Languages**	Set the system language.
	Date & Time	Set the current date and time of the system. Enter the date in the date and time bar, or select the date through the calendar. Delete the original value, and enter the correct value.
	Current Time	Set the current time of the system. Delete the original value, and enter the new value.
	Keyboard Layout	Set the keyboard layout.
	Time Zone	Set the time zone of the system.
	Date Format	Set the date format.
	Time Format	Set the time format of the system.
	Current Time	Set the current time of the system. Position the cursor behind the hour, minute, and second values in sequence. Delete the original value, and enter the new value.
	Sync	Synchronize system time to the system hardware time.

4.2.2 General

Open the General tab via **[Preset]** (press **<Setup>**) → **[System Preset]** → **[General]**.

This tab is access to settings of homescreen animal information (type, name, height unit, etc.), status after exam ends, system screen saver, and system time.

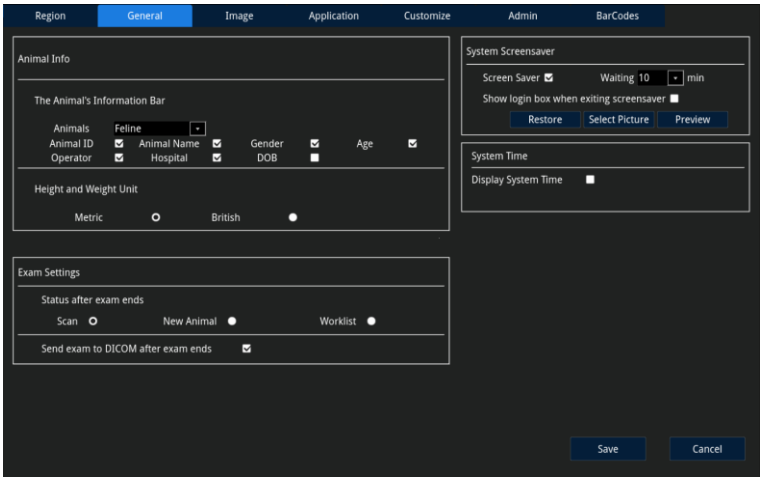

Figure 21 System Preset-General

Table 17 System Preset-General

Item		Description
Animal Info	**Animals**	Set the animal type.
	Display Item	Set whether to display animal name, DOB (Date of Birth), gender, age, hospital, animal ID and operator information on the Home screen.
	Height and Weight Unit	Set the Height and Weight units of animal.
Exam Settings	**Status after exam ends**	Set the status after exam ends.
	Send exam to DICOM after exam ends	Set whether to send the animal data automatically to the DICOM server for storage after exam ends.
System Screensaver	**Screen Saver**	Enable/disable the screen saver and set the waiting time before entering the screen saver.
	Show login box when exiting screensaver	Set whether to show the login box when exiting the screen saver.
	Restore	Restore to the default screen saver.
	Select Picture	Select a picture as the screen saver.
	Preview	Preview the screen saver picture.
System Time	**Display System Time**	Set whether to display system time.

4.2.3 Image

Open the Image tab via **[Preset]** (press **<Setup>**) → **[System Preset]** → **[Image]**. This tab is access to related settings on save, output, display, and freeze for images and cines.

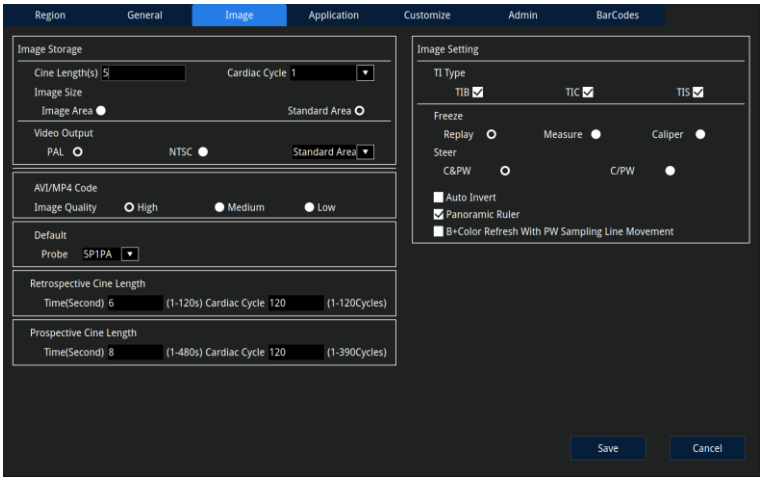

Figure 22 System Preset-Image

Table 18 System Preset-Image

Item		Description
Image Storage	**Cine Length**	Set the cine length.
	Cardiac Cycle	Set the cardiac cycle.
	Image Size	Set the save area of images. Image Area: image and image parameters Standard Area: image, image parameters, and information at the top of the Home screen
	Video Output	Set the format of video output / S-video output.
Retrospective Cine Length		Set the cine length for retrospective live capture and cardiac cycle.
Prospective Cine Length		Set the cine length for prospective live capture and cardiac cycle.
AVI/MP4 Code	**Image Quality**	Set the quality of images to be sent as AVI/MP4. Higher quality means clearer images, but it takes longer to save and uses more storage space.
Default	**Probe**	Set default probe.
Image Settings	**TI Type**	Set whether to display the bone thermal index of bone (TIB), the thermal index of cranial (TIC) or thermal index of soft tissue (TIS) in the image area.
	Freeze	Set status after freeze.
	Zoom Type	Set the magnification type.

Item		Description
	Steer	Set whether to steer the sampling frame of the Color mode and the sampling line of the PW mode together under B + Color + PW mode.
	Auto Invert	Set whether the spectrum automatically inverts accordingly when the sampling line and the sampling frame are steered.
	Horizontal Ruler	Set whether to display horizontal imaging ruler.
	Center Line	Set whether to display center line.
	Panoramic Ruler	Set whether to display panoramic imaging ruler.
	B+Color Refresh with PW Sampling Line Movement	Set whether to activate B+Color live image when moving PW sampling line and freeze the B+Color image when stopping moving PW sampling line.

4.2.4 Application

Open the application tab via **[Preset]** (press **<Setup>**) → **[System Preset]** → **[Application]**. This tab is access to related setting of measurement and annotation.

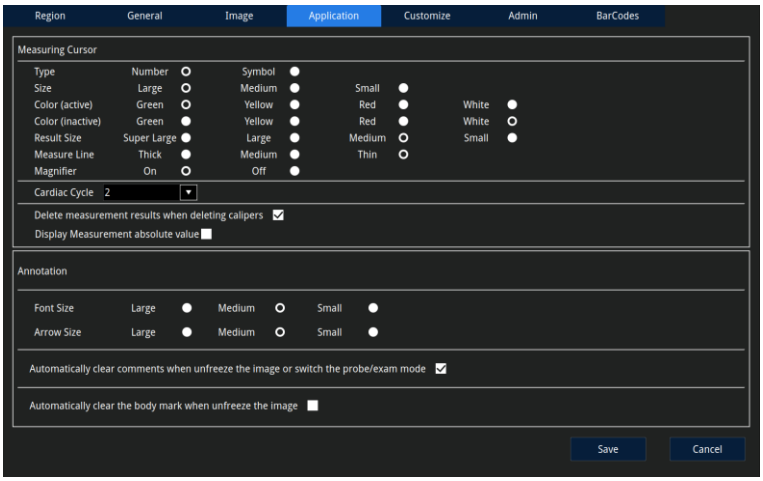

Figure 23 System Preset-Application

Table 19 System Preset-Application

Item		Description
Measuring Cursor	**Type**	Set the cursor type.
	Size	Set the cursor size.
	Color (active)	Set the color of cursor and measurement results of activated state.
	Color (Inactive)	Set the color of cursor and measurement results of not-activated state.

Item		Description
	Result Size	Set the font size for measuring result.
	Measure Line	Set the thickness of the measurement line.
	Magnifier	Set whether to enable the magnifier function when entering the measurement mode.
	Cardiac Cycle	Set the number of cardiac cycles when taking heart rate measurement.
	Delete measurement results when deleting calipers	Set whether to clear the measurement results in the result window when deleting the calipers.
	Display measurement absolute value	When enabled, all measurement results in the result window and report screen are displayed as positive values, and negative input or modification is not allowed.
Annotation	**Font Size**	Set the font size for text annotation or comments.
	Arrow Size	Set the arrow size for arrow annotation.
	Automatically clear comments when unfreeze the image or switch the probe/exam mode	Set whether to clear all comments or annotations on the image automatically when unfreezing the image, switching the probe, or switching the exam mode.
	Automatically clear the body mark when unfreeze the image	Set whether to clear the body mark automatically when unfreezing the image.

4.2.5 Customize

Open the Customize tab via **[Preset]** (press **<Setup>**) → **[System Preset]** → **[Customize].** This tab is access to function definition for user-defined buttons and foot switch.

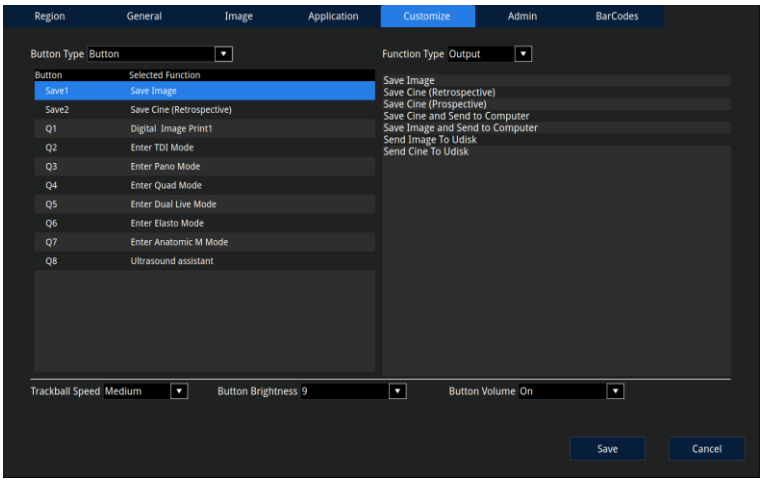

Figure 24 System Preset-Customize

Table 20 System Preset-Customize

Item	Description
Button Type	Select the button type you want to set.
Function Type	Select the function assigned by the button and the function list displays below.
Trackball Speed	Set the speed of trackball.
Button Brightness	Set the button brightness level.
Button Volume	Turn on/off the button volume function.

To customize user-defined button/foot switch, perform the following steps:

1. Click **[Button Type]** drop-down box and select button type.
2. Select a button you want to customize by pressing the **[Set]** button.
3. Click the **[Function type]** drop-down box to display all definable functions.
4. Double click a definable function to assign the function to the desired button.
5. Click the **[Save]** to save modifications and return to the Home screen.

4.2.6 Admin

The system supports three types of users: the administrator, operator and emergency user.

Icon	User	Permission
	Administrator	Access to all animal data in the system and be able to add users, delete users, import data, export data, delete data, edit data, store data, upgrade software / firmware, etc.
	Operator	Access to all animal data in the system and be able to import data, export data, delete data, edit data, and store data.
	Emergency user	Access to view and store animal data only. Data exporting, deleting and editing are not allowed.

4.2.6.1 Access Setting

Open the Permission tab via **[Preset]** (press **<Setup>**) → **[System Preset]** → **[Admin]**.

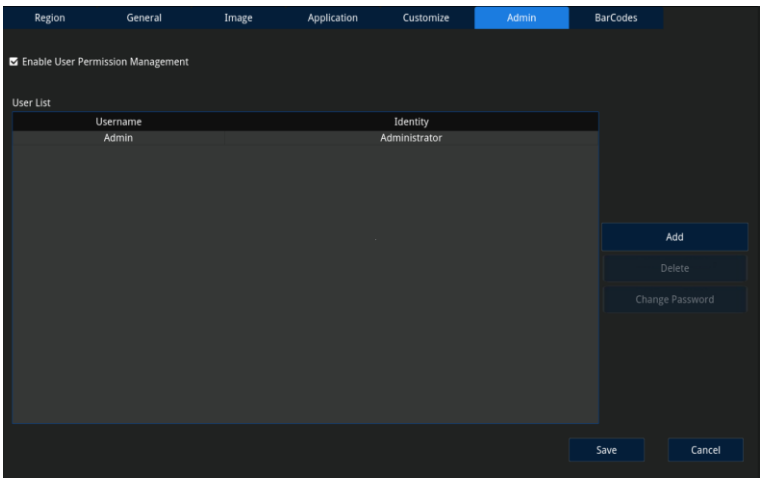

Figure 25 System Preset-Admin

Table 21 System Preset-Admin

Item	Description
Enable User Permission Management	If **[Enable User Permission Management]** is checked, you must log in to access system data. Admin initial password is empty. Set a new password when enabling permission for the first time. If **[Enable User Permission Management]** is unchecked, you can access all data without authorization. Permission is not enabled by default.
Add	To add a new user: 1) Click **[Add]** to pop up the Add New User dialog box. 2) Enter a new user name, enter password, confirm the password, select a new user type, and click **[OK]** to complete adding a new user.
Delete	To delete an existing user: ● Select the target user in the user list and click **[Delete]**.
Change Password	To modify the password of current user: 1) Select the target user in the user list and click **[Change Password]**, a dialog box pops up. 2) Enter the new password, confirm the new password and click **[OK]** to complete the password modification.

NOTE: Only administrators can enable/disable admin and add/delete users.

4.2.6.2 System Login

When admin is enabled, you can access the data in the system only after logging in.

To log on the system:

1. The system pops up the login dialog box as shown below.

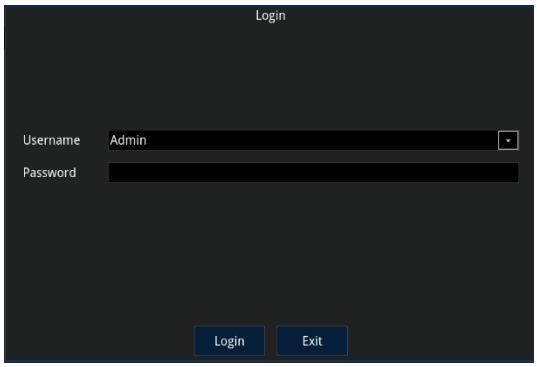

2. Click **[Username]** drop-down box to select the username.
3. Enter correct password and click **[Login]**.

4.2.6.3 Change User

To change user:

1. Click the user icon "" to pop up the dialog box as shown below.

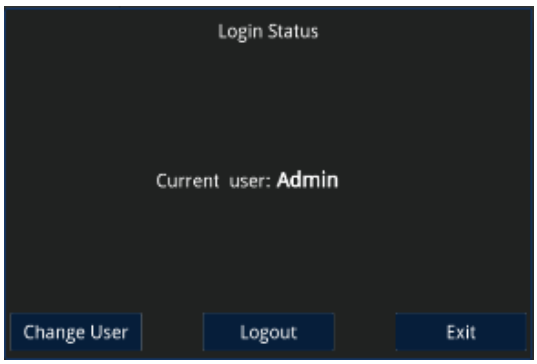

2. Click **[Change User]**, the login dialog box pops up.
3. Select desired user name and enter the password and then click **[Login]**.

4.2.6.4 System Logout

To log out the system:

1. Click the user icon "" to pop up the dialog box as shown below.

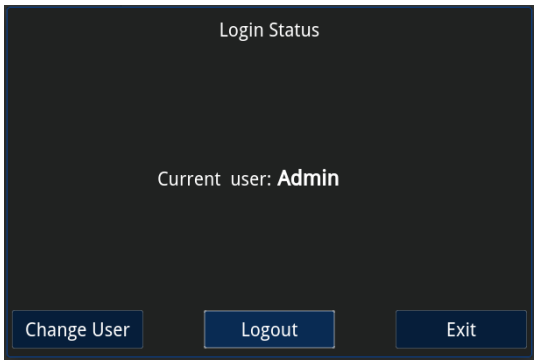

2. Click **[Logout]**.

4.2.7 BarCodes

Open the Barcode tab via **[Preset]** (press **<Setup>**) → **[System Preset]** → **[BarCodes]**.

This tab is access to related settings of the barcode function.

Use the barcode reader to scan the barcode for automatic entry of animal information. The system recognizes both one-dimensional and two-dimensional barcodes. You can customize what information to capture from the barcode based on different animal information fields.

Once the barcode configuration feature is enabled, scanning a code on the main interface will automatically redirect to the Animal Information screen and fill in the animal details based on the configured fields (scanning can also be performed directly on the Animal Information screen). On the Review screen, scanning a code will retrieve the animal information from the Station using the animal ID.

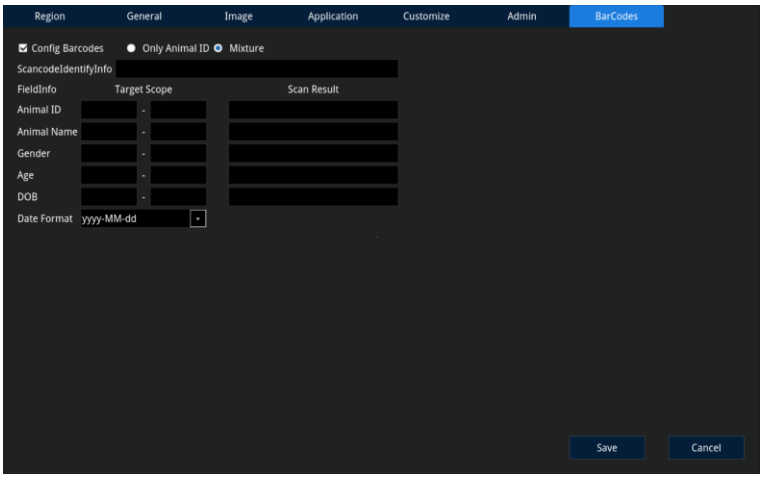

Figure 26 System Preset-BarCodes

Table 22 System Preset-BarCodes

Item	Description
Config Barcodes	Check the checkbox and then set the desired scan configuration mode. **Only Animal ID**: enter all scanned data into the Animal ID field on the Animal Information screen. **Mixture**: enter the scanned data into separate fields, e.g. 1-5 for Animal ID.
ScancodeIdentifyInfo	Displays animal information identified by the barcode reader. ● Click **[ScancodeIdentifyInfo]** before scanning codes with the barcode reader.
FieldInfo	Animal information fields, including animal ID, animal name, gender, age, and date of birth, and date format.
Target Scope	Set the scope of scanned data to be entered into the specified fields.
Scan Result	Displays the scan results within the corresponding target scope.

4.3 Exam Preset

Enter the Exam Preset screen by clicking **[Exam Preset]** in Setup screen.

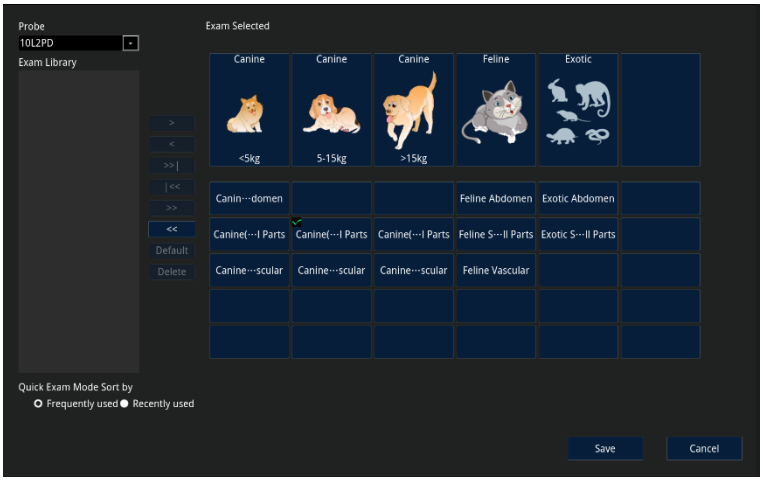

Figure 27 Exam Preset

Table 23 Exam Preset

Item	Description
Probe	Select a probe.
Exam Library	Display all available exam modes for current probe.
Exam Selected	Display all selected exam modes for current probe.
[<] / [>]	Add / Remove selected exam modes of current probe.
[<<] / [>>]	Add / Remove all exam modes of current probe (expect for the default exam mode).
[| <<] / [>> |]	Add / Remove all exam modes of current animal (expect for the default exam mode).
Default	Set the selected exam mode as default for the current probe. Default exam mode is marked with a "√".
Delete	Delete User-defined exam mode.
Quick Exam Mode Sort by	Set quick exam mode displaying order: either display the user's most frequently used, or most recently used exam modes on the touch screen (up to 7 can be displayed).

4.3.1 Add Exam Mode

To add an exam mode, perform the following steps:

1. Click the **[Probe]** drop-down box to select the probe type.
2. Select the desired exam mode list from the Exam Library.
3. Click the blank box of the Exam Selected area to determine the location to add

exam mode.

If you do not assign a location, the system defaults to add an exam mode to the blank box in the order of top-down, left-to-right.

4. Click the **[>]** to add the selected exam mode to the Exam Selected area.

   Or click the **[>>]** to add all exam modes from the Exam Library to the Exam Selected area.

5. Click **[Save]** to complete setting.

4.3.2 Remove Exam Mode

To remove exam mode:

1. Click the **[Probe]** drop-down box to select the probe type.
2. Select an exam mode you want to remove from the Exam Selected area.
3. Click **[<]** to remove the selected exam mode.

   Or click **[<<]** to remove all exam modes listed in the Exam Selected area (expect for the default exam mode).

4. Click **[Save]** to complete setting.

4.3.3 Create/Delete User-defined Exam Mode

To create a user-defined exam mode:

1. Press the **<QSave>** on the keyboard to open the QSave dialogue box.
2. Rename and select data source and then click **[Create]** to create a user-defined exam mode.

To delete a user-defined exam mode:

1. Select the user-defined exam mode you want to delete from the Exam Selected area.
2. Remove the desired exam mode to the Exam library and click **[Delete]** to delete a user-defined exam mode.

4.3.4 Adjust Exam Mode Display Position

The position of the exam mode displayed in the Exam Selected/ QuickExam selected area will be synchronously displayed on the touch screen. You can adjust the display position of the exam mode to facilitate operation by following methods:

- **Method 1**

  Select an exam mode to move and click on a blank box.

  The selected exam mode will be moved to the blank box position.

- **Method 2**

  Click two exam modes to exchange the positions of these two exam modes.

4.4 Annotation Preset

In the Preset screen, select **[Annotation Preset]** to enter the Annotation Preset screen. On this screen, you can set the annotations/comments for the current exam mode.

Table 24 Annotation Preset

Item	Description
Current Annotation Library	Displays the annotation library for the current exam mode (cannot be set).
Optional Annotation Library	Select from all supported annotation libraries for different exam modes.
Selected Annotation Library	Displays selected annotations for the current exam mode.
Add New Annotation	Enter custom comment text manually.
Save (Middle of page)	Save a custom annotation to the optional annotation library.
Delete	Remove a custom annotation from the optional annotation library.
Up/Down	Adjust the position of the selected annotation.
[>]	Add an annotation from the selected optional annotation library to selected annotation library.
[<]	Remove the selected annotation from selected annotation library.
[>>]	Add all annotations from the optional annotation library to selected annotation library.
[<<]	Remove all annotations from selected annotation library.
Save (Lower right)	Save the current settings and return to the Home screen.
Cancel	Cancel the current settings and return to the Home screen.

4.4.1 Add Annotation

To add a new annotation:

1. Click the **[Optional Annotation Library]** drop-down box to select the system's default configured annotation library as the source for adding annotations in the current exam mode.
2. Click to select the annotations to be added from the left annotation library.
   - You can also add custom annotations to the left annotation library (see "4.4.3 Add/Delete Custom Annotation" for details).
3. Click **[>]** to add the selected annotation to the selected annotation library on the right.

   Or click **[>>]** to add all annotations in the left annotation library to the selected

annotation library.

4. Click **[Save]** to save the current settings and return to the Home screen.

4.4.2 Remove Annotation

To remove annotations:

3. Click to select a comment in the selected annotation library on the right.
4. Click **[<]** to remove the selected annotation from the selected annotation library on the right.

   Or click **[<<]** to remove all annotations from the selected annotation library on the right.

4.4.3 Add/Delete Custom Annotation

To add a custom annotation:

1. Type the custom annotation in the blank column below **[Add New Annotation]**.
2. Click **[Save]** and the custom comment will be added to the end of the list in optional annotation library on the left.

To delete a custom annotation:

1. Select the custom annotation to be deleted from the annotation library on the left.
2. Click **[Delete]** and the custom comment will be deleted from the optional annotation library on the left.
   - Deleting a custom annotation from the optional annotation library on the left, which has already been added to the selected annotation library on the right, will not remove it from the selected annotation library simultaneously.

4.5 Measure Preset

Enter the Measure Preset screen by clicking **[Measurement Preset]** in the Preset Screen. The Measure Preset is access to related settings for general measure items, application measure items and report templates.

4.5.1 General Measurement Preset

To preset the general measurement:

1. Click **[Caliper]** tab to enter the general measurement preset page. The left column lists available measurement items while the right column lists selected measurement items.
2. Click **[2D]**, **[M]**, or **[Doppler]** tab to set measurement items under corresponding imaging mode.

3. Click **[Measurement Package]** drop-down box to select an exam mode.
4. Set measurement item.

Operation	Description
Add Measurement Item	1) Select the item(s) you want to add from the left column. 2) Click **[>]** to add the selected items of the left column to the right column (double-click an item of the left column can also add it to the right column). Or Click **[>>]** to add all items of the left column to the right column.
Remove measurement Items	1) Select the item(s) you want to add from the left column. 2) Click **[<]** to remove the selected items from the right column to the left column. Or Click **[<<]** to remove all items from the right column to the left column.
Adjust measurement item position	Select a selected measurement item and click **[Up]** / **[Down]** to adjust the position of the measurement items.
Set default measurement item	Select a selected measurement item and click **[Default]** to set the measurement item as default. Default measurement item is marked with a "√".
Set Measurement Item Property	Select a selected measurement item, click **[Property]** to open the properties dialog box. Check the items to display in the result window or set the measurement item properties.
Status after completing current measurement.	Click on the **[Measurement Sequence]** drop-down box to set the status after completing current measurement. ● None: No measurement item is activated after completing the current measurement. ● Repeat: Activate the current measurement item again after completing the current measurement. ● Next: Activate the next current measurement item after completing the current measurement.

5. Click **[Save]** to save current settings and return to the Home screen.

4.5.2 Application Measurement Preset

To preset application measurement item:

1. Click **[Measure]** tab to enter the application measurement preset page.

   The left column lists available measurement items while the right column lists selected measurement items.
2. Click **[2D]**, **[M]**, or **[Doppler]** tab to set measurement items under corresponding imaging mode.
3. Click **[Measurement Package]** drop-down box to select an exam mode.
4. Set measurement item.

Operation	Description
Add Measurement Item	1) Select the item(s) you want to add from the left column. 2) Click **[>]** to add the selected item of the left column to the right column (double-click an item of the left column can also add it to the right column). Or click **[>>]** to add all items of the left column to the right column.
Remove Measurement Item	1) Select the item(s) you want to remove from the right column. 2) Click **[<]** to remove the selected item from the right column to the left column. Or click **[<<]** to remove all items from the right column to the left column.
New	Open the Customize Wizard dialog box.
Delete	Remove a customized measurement item.
Advanced	Open the Advanced Setting dialog box.
Adjust Measurement Item Position	Select a selected measurement item and click **[Up]** / **[Down]** to adjust the position of the measurement items.
Set Default Measurement Item	Select a selected measurement item and click **[Default]** to set the measurement item as default. Default measurement item is marked with a "√".
Set Measurement Item Property	Select a selected measurement item, click **[Property]** to open the properties dialog box. Check the items to display in the result window or set the measurement item properties.
Status after completing current measurement.	Click **[Measurement Sequence]** drop-down box to set the status after completing current measurement. ● None: No measurement item is activated after completing the current measurement. ● Repeat: Activate the current measurement item again after completing the current measurement. ● Next: Activate the next current measurement item after completing the current measurement.

5. Click **[Save]** to save current settings and return to the Home screen.

4.5.2.1 Customize Application Measurement / Calculation Item

To customize application measurement / calculation item:

1. Click **[New]** to open the Customize Wizard dialog box.
2. Enter an item name, select item type, and click on **[Next]**.
3. Set measurement item properties.
4. Click **[Complete]** to save the customized measurement/calculation item settings and close the Customize Wizard dialog box. The customized measurement / calculation items are displayed at the bottom of the list of available measurement items on the left.

4.5.2.2 New Study

5. Select the measurement package you want to add a new study.
6. Click **[New Study]** to open new study dialog box.
7. Enter the name of the new study and click **[OK]**. The new study is displayed at the bottom of the list on the right.

4.5.2.3 Edit Measurement Package

To edit measurement package:

1. Click **[Advanced]** to enter the New Measurement Package screen. Available packages are listed in the left column while the selected packages are listed in the right column.
   - Available Items: application packages configured in the system but not yet assigned to the current mode.
   - Selected Packages: application packages assigned to the current exam mode. If more than one package is assigned to the current exam mode, you can rotate the knob under **[Exam]** to switch the application packages.
2. Edit Measurement package. You can add, remove, adjust the measurement package order, and set the default measurement package.

Operation	Description
Add Measurement Package	1) Select the package(s) you want to add from the left column. 2) Click **[>]** to add the selected package from the left column to the right column (double-click a package of the left column can also add it to the right column). Or click **[>>]** to add all packages from the left column to the right column.
Remove Measurement Package	1) Select the package(s) you want to remove from the right column. 2) Click **[<]** to remove the selected package from the right column to the left column (double-click a package of the right column can also remove it to the left column). Or click **[<<]** to remove all packages from the right column to the left column.
New	Open the input dialog box and enter the measurement package name.
Delete	Remove a customized measurement package.
Adjust Measurement Package Position	Select a selected measurement package and click **[Up]** / **[Down]** to adjust the measurement package position.
Set Default Measurement Package	Select a selected measurement package and click **[Default]** to set the measurement package as default. Default measurement package is marked with a "√".

3. Click **[OK]** to exit the New Measurement Package screen and the current measurement package will be replaced by the new default measurement

package.

4.5.3 Report Template

Click **[Report]** tab to enter the Report Preset screen. This tab is access to relevant settings of report template.

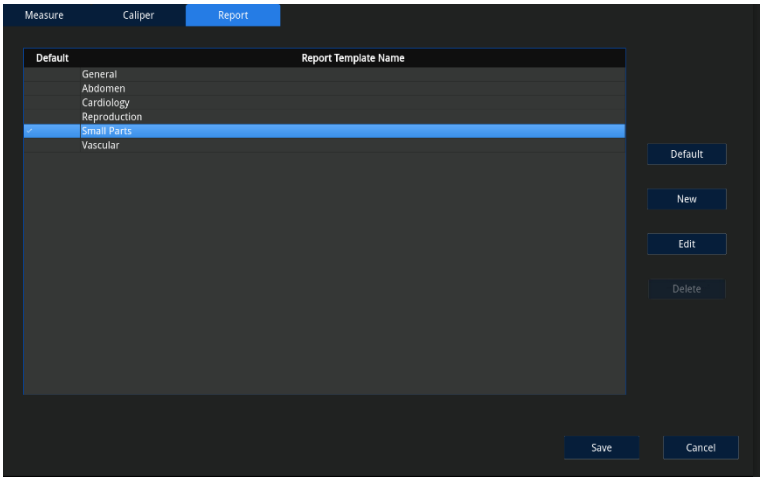

Figure 28 Measure Preset- Report

4.5.3.1 Default Report Template

Select a report template in the report template list and click **[Default]** to set the template as default.

Default report template is marked with a "√".

4.5.3.2 New Report Template

1. Click **[New]** to pop up new report template dialog box.
2. Enter the name of the report.
3. Set the measurement results displayed in the report template.

Operation	Description
Add measurement result in the report	1) Click **[Optional Items]** drop-down box, select the exam mode, and select the corresponding item type in the right drop-down box. 2) Select a result item from the left column. 3) Click **[>]** to add the measurement result item to the report; Or click **[>>]** to add all measurement result items to the report.
Remove measurement result from the report	1) Select a result item from the right column. 2) Click **[<]** to remove the measurement result item of the report (double-click a result item of the left column can also add it to the report); Or Click **[<<]** to remove all the measurement result items from the right column to the left column.
Adjust measurement result position	Select a measurement result item in the right column, and click **[Up]** / **[Down]** to adjust the position of measurement results displayed in the report.

4. Click **[OK]** to exit the report template screen, and the new report template is displayed in the report template list.

4.5.3.3 Edit Report Template

1. Select a report template in the report template list.
2. Click **[Edit]** to enter the report template edit screen.
3. Complete relevant settings as needed.
4. Click **[OK]** to save modifications and exit the report template edit screen.

4.5.3.4 Delete Report Template

Select a report template in the report template list and click **[Delete]** to delete the template.

4.6 zWorkflow Preset

Users can use the auto workflow template for an automatic scan. The auto workflow function will help to reduce unnecessary operation and improve exam efficiency.

4.6.1 Workflow Protocol

A workflow protocol should be set before using the auto workflow function.

In the Preset screen, select **[zWorkflow Preset]** to enter the zWorkflow setting screen.

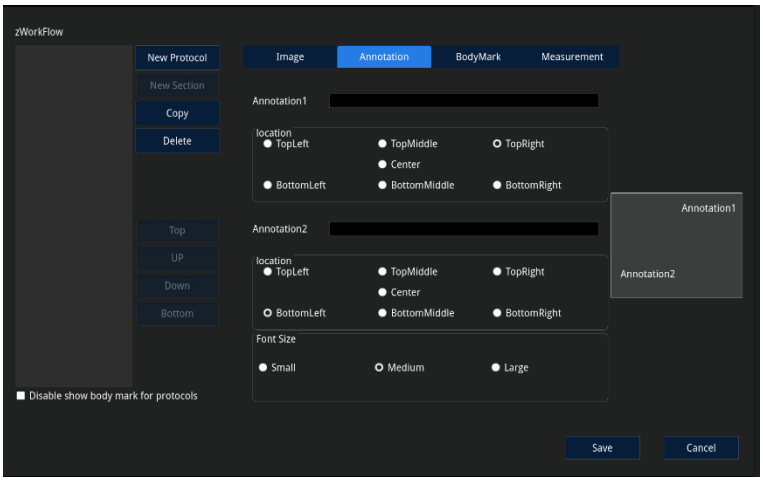

Figure 29 zWorkflow

Table 25 zWorkflow

Item	Description
Protocol List	List all stored protocols.
New Protocol	Create a new user-defined protocol.
New Section	Add a new view for selected protocol.

Item	Description
Copy	Copy a protocol.
Delete	Delete a protocol.
Top	Move the selected protocol to the top of the list.
Up	Move the selected protocol up.
Down	Move the selected protocol down.
Bottom	Move the selected protocol to the bottom.

4.6.2 New Protocol

To create a new protocol, please perform the following steps:

1. In ZWorkflow preset screen, click **[New Protocol]**, enter protocol name to create a new protocol.
2. Select protocol type and application.
3. Click **[New Section]** to enter the section name, and perform image, comments, body mark, measurement settings as needed.
4. Use the check box for auto OB measurement and body mark display settings.
5. Click **[Save]** to complete the setting and exit.

4.6.3 Basic zWorkflow Procedures

1. Tap **[ZWork]** on the touchscreen to activate zWorkflow function.
2. Enter and save animal's information.
3. Select desired protocol from the touchscreen.
4. Complete the scanning and saving of all sections according to the selected protocol, and complete the exam.
5. Perform measuring, add annotations or body mark as needed.
6. Tap **[ZWork]** again to exit zWorkflow function.

4.6.4 Section Operation

In zWorkflow status, you can perform section selection, operation, repetition, replacement and deletion by the touch screen.

- **Select Section**

Tap **[Previous]**/**[Next]** to select the section to be scanned, the current section is around by a green frame.

- **Execute Section**

In the current active section, you can perform image scanning, measurements, adding

comments and body mark, etc.

- **Repeat Section**

Tap **[Repeat]** to insert another template of the current section, then you can perform an extra examination.

- **Redo Section**

Tap **[Redo]** to redo the current section.

- **Delete Section**

Tap **[previous]/[Next]** to select the section to be deleted, and then tap **[Delete] t**o delete the selected section.

- **View Undone Section**

Tap **[Undone Section]** to check and select undone section quickly.

4.7 Network Preset

Network preset includes local and DICOM service-related network settings, as well as transfer assistant settings.

This section only introduces local network settings and transfer assistant settings. For details about the DICOM service-related network settings, refer to “Chapter 11 DICOM”.

4.7.1 Local Network

In the Preset screen, select **[Network Preset]** → **[Local TCP/IP]** to enter the local network setting screen. This screen is access to local network and LAN settings.

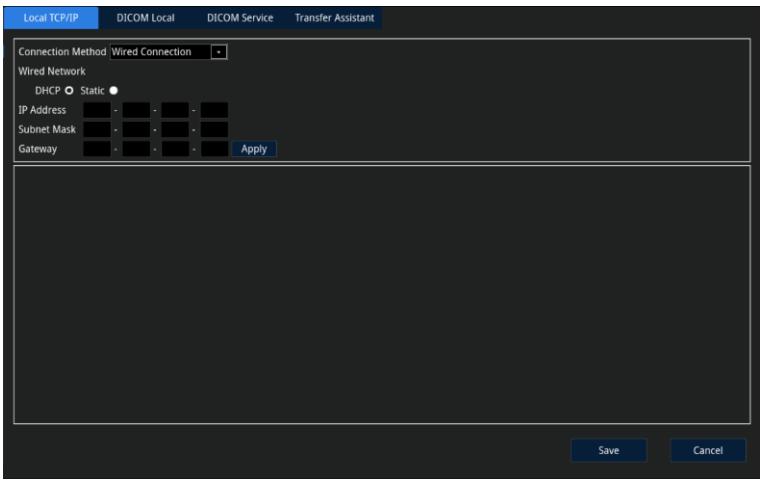

Figure 30 Network Preset- local TCP/ IP

Table 26 Network Preset- local TCP/ IP

Item	Description	
Wired Network	**Network Acquiring**	Select network acquiring method.

Item	Description	
	IP Address	The IP address of system should be in the same network segment as the IP address of the server.
	Subnet Mask	Enter the subnet mask address of the system to set different network segments.
	Gateway	Enter the gateway address of the system.
	Apply	Click to make the modifications in this network property effective.
Wireless Network (Reserved function)	**Auto Connection**	Turn on/off the auto connection function.
	Refresh	Click to refresh the wireless network.

NOTE: IP address should not be occupied by other device in the LAN. Malfunction of DICOM will result.

4.7.2 Transfer Assistant

In the Preset screen, select **[Network Preset]** → **[Transfer Assistant]** to enter the transfer assistant setting screen. The transfer assistant is used to configure settings for transfer animal data directly to the computer via local area network (LAN).

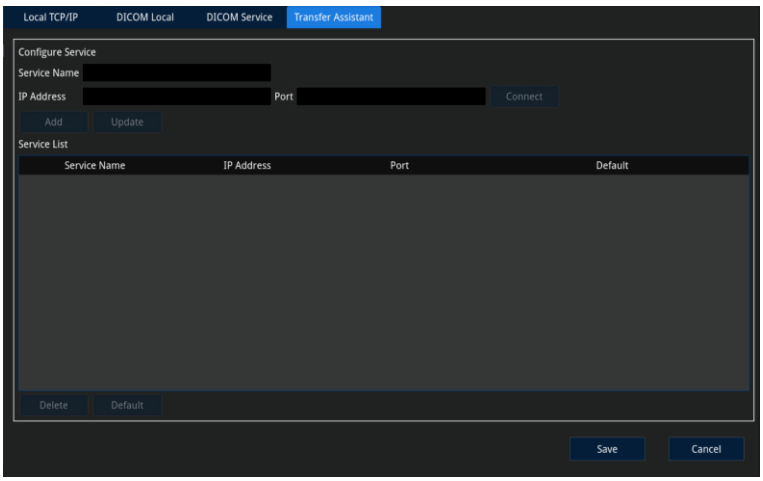

Figure 31 Network Preset - Transfer Assistant

Table 27 Network Preset - Transfer Assistant

Item		Description
Configure Service	**Service Name**	Enter a service name (do not use a duplicate service name).
	IP Address	Enter the IP address of your computer.
	Port	Enter the port of the computer client.
	Connect	Verify whether the computer client is successfully connected to the ultrasound device.

Item		Description
	Add	Add the configured service to the service list.
	Update	Update the IP address and port information of the selected service.
Service List		Displays a list of services that have been added.
Delete		Deletes the selected service in the service list.
Default		Set the selected service in the service list as the default service.

NOTE: Before configuring the transfer assistant, please install or update the corresponding version of the software package on your computer and configure the service.

4.7.2.1 Configure the Transfer Assistant Service

To configure the Transfer Assistant service, perform the following steps:

1. Enter the service name, the IP address and port corresponding to the computer client under Configure Service on the transfer assistant setting screen, and click **[Connect]**.
   - The computer and ultrasound device must be on the same local area network to establish a connection.
2. Click **[Add]** to add the configured service to the service list, and the first service added will be the default service.
   - **Update service**: Select the desired service from the list, the service name, IP address, and port will be automatically filled in to the corresponding location. Modify the information, and click **[Update]** to update the IP address and port information of the selected service.
   - **Delete service**: Select the desired service in the service list and click **[Delete]** to delete it.
   - **Default service**: Select the desired service in the service list, and click **[Default]** to set it as the default service.
3. Click **[Save]** to save the settings and exit.

4.8 Print Preset

In the Preset screen, select **[Print Preset]** to enter the print preset screen. This screen is access to printing settings.

To add a printer, refer to “3.10.2 Connect Printer” for details.

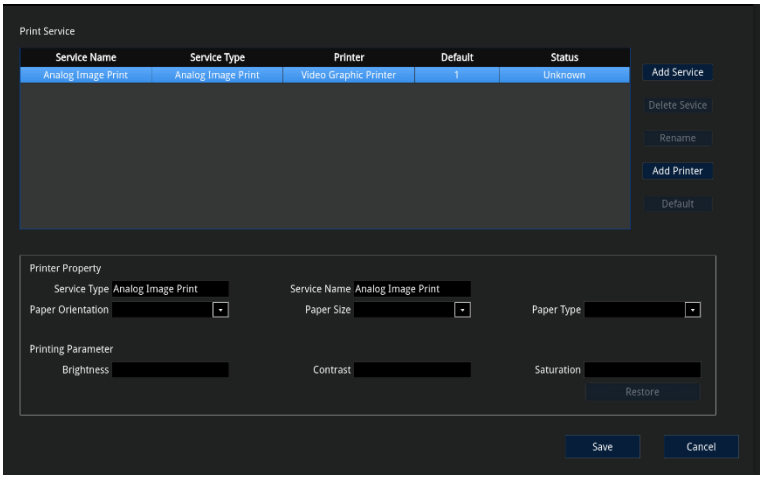

Figure 32 Print Preset

Table 28 Print Preset

Item		Description
Print Service	**Add Service**	Click to open the add service dialog box.
	Delete Service	Click to remove the selected service.
	Rename	Click to rename the selected service.
	Add Printer	Select printer driver and perform related settings.
	Default	Click to set the selected service as default.
Printer Property	**Service Type**	Display service type of the printer.
	Service Name	Display service name of the printer
	Paper Orientation	Set the paper orientation for printing.
	Paper Size	Set the paper size for printing.
	Paper Type	Set the paper type for printing.
Printing Parameter	**Brightness**	Set the brightness for printing.
	Contrast	Set the contrast for printing.
	Saturation	Set the saturation for printing.
	Restore	Restore default parameter setting for printing.

4.9 About & Maintenance

In the Preset screen, select **[About & Maintenance]** to enter the Maintenance Preset screen.

This screen is access to system information, detailed information, option and other. You

can view system information and configure options and other settings.

4.9.1 System Information

Select **[About & Maintenance]** → **[System Info]** to enter the System Information screen, where you can view the release version information of the system.

4.9.2 Detailed Information

Select **[About & Maintenance]** → **[Detailed Info]** to enter the Detailed Information screen, where you can view the detailed information of the system.

The information displayed varies depending on the configuration and version of the system.

4.9.3 Option

Select **[About & Maintenance]** → **[Option]** to enter the Option screen. This screen lists all the available options and their installation status. You can also view the machine code in this screen and contact the dealer to complete the whole machine authorization.

4.9.4 Other

Select **[About & Maintenance]** → **[Other]** to enter the Other screen.

This screen is access to import / export for preset data and exam mode, restore factory defaults and upgrade.

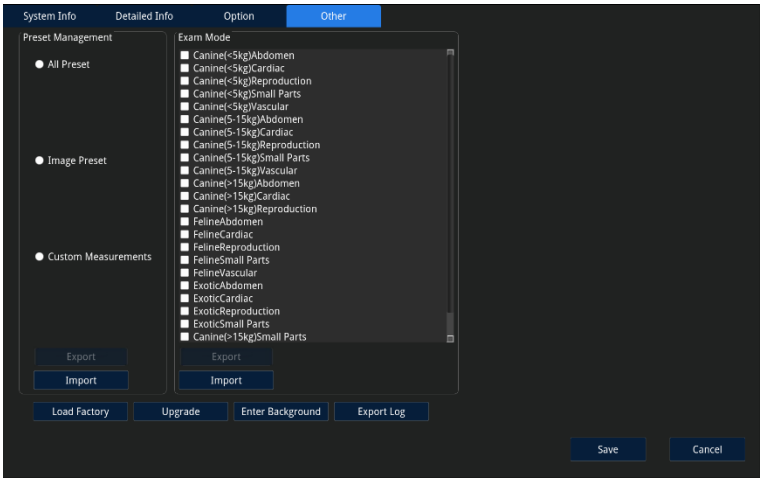

Figure 33 About & Maintenance- Other

Table 29 About & Maintenance- Other

Item		Description
Preset Management	**All Preset**	Select management preset data to all preset.
	Image Preset	Select management preset data to image preset.
	Custom	Select all management preset data to customized measurement

Item		Description
	Measurements	preset.
	Export	Export selected preset data.
	Import	Import preset data to the system.
Exam Mode	**Export**	Export selected exam mode.
	Import	Import exam mode to the system.
Load Factory		Restore all settings to factory defaults.
Upgrade		Upgrade software versions.
Enter Background		Enter engineering mode. Only available to authorized personnel.
Export Log		Export the log. Only available to authorized personnel.

NOTE: DO NOT remove the USB device or shut down the system during software upgrade.

Chapter 5 Preparing an Exam

5.1 Animal Information

Although the system supports exams without entering animal information, to avoid data chaos, it is recommended to enter animal information before performing an exam for better animal data management.

For archived animals, you can obtain animal information via the local and DICOM servers.

5.1.1 New Animal

Enter the animal information prior to the exam for the first time.

To start a new animal, perform the following steps:

1. Press **[Patient]** button on the control panel to enter the Animal Information screen.

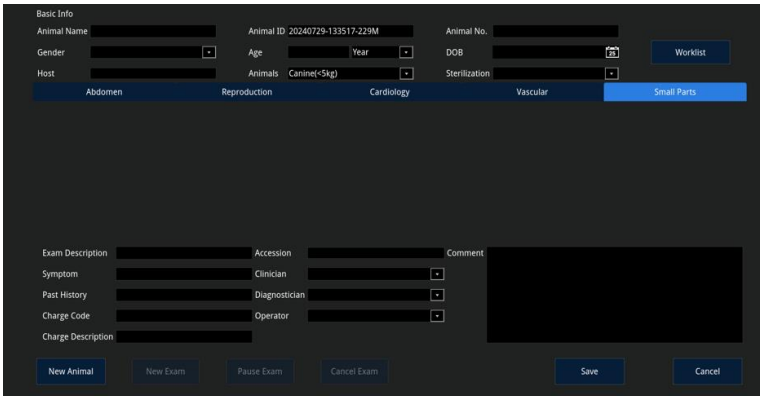

Figure 34 Animal Information Screen

Table 30 Animal Information Screen

Item	Description
Worklist	Click to enter the Worklist screen.
New Animal	Click to erase all animal data and create a new animal record by entering new animal information.
New Exam	Click to end current exam and create a new exam for current animal.
Pause Exam /Resume Exam	Click to pause the current exam. Click again to resume the paused exam.
Cancel Exam	Click to cancel the current exam. Canceled exams cannot be restored.
Save	Click to save animal information and return to the Home screen.
Cancel	Click to cancel animal information input and return to the Home screen.

2. Move the cursor to the desired text box and enter the animal's basic information.

Exam Information	Description
Animal Name	Enter animal name.
Animal ID	The system generates animal ID automatically. To enter the animal ID manually, please delete the default animal ID first and then enter the new ID. The system also supports obtaining the ID code via barcode scanning. For details on using the barcode reader, see “3.12 Barcode Reader”.
Animal No.	The system auto-synchronizes the serial number of the same animal in the worklist.
Gender	Click drop-down box to select animal gender.
Age	Enter the date of birth; the system will automatically calculate the animal’s age. Otherwise, manual input is required.
DOB	Enter directly in the text box, or click the drop-down box to select the animal’s date of birth in the calendar.
Host	Enter host name.
Animal Type	Select animal type.
Sterilization	Select sterilization status.

NOTE: Use keyboard for information entry. Press <Ctrl> + <Space> to switch input method between Chinese and English.

3. Click the corresponding tab to select the appropriate exam type, and enter the animal’s exam information.

   - Available exam types are: ABD (Abdomen), REP (Reproduction), CARD (Cardiology), VAS (Vascular), and SMP (Small Parts).
   - Exam-specific information is required for different exam types.

Exam Type	Exam Information	Description
Abdomen	**Height**	/
	Weight	/
	BSA (Body Surface Area)	After entering the weight, the system calculates the BSA according to the animal type selected by the user.
Reproduction	**Calculation Index**	LMP: enter the last menstrual period.
	Gestations	Select fetus number. The system supports up to 15 fetus measurements.
	Gravida	Times of pregnancy.
	Para	Times of delivery.
	Ectopic	Times of abnormal pregnancy. (E.g. Ectopic pregnancy)
	Abortion	Times of abortion.

Exam Type	Exam Information	Description
Cardiology	**Height**	/
	Weight	/
	BSA (Body surface area)	After entering the weight, the system calculates the BSA according to the animal type selected by the user.
	HR	Heart rate of the animal.
	RA Press	Right atrium pressure of the animal.
	BP	Blood pressure of the animal.
Vascular	**Height**	/
	Weight	/
	BP (L)	Left limb blood pressure of the animal.
	BP (R)	Right limb blood pressure of the animal.
Small Parts	**/**	/

4. Enter operation information.

Operation Information	Description
Exam Description	Briefly describe the exam.
Symptom	Explain the reasons for performing ultrasound exam.
Past History	Enter the previous medical history of the animal.
Charge Code	Enter the charge code.
Charge Description	Briefly describe the charge information.
Accession	Enter the accession number.
Clinician	Enter the name of the clinician.
Diagnostician	Enter the name of the diagnostician who is responsible for the exam.
Operator	Enter the name of the operator.
Comment	Enter supplementary exam information.

5. Click **[Save]** to save the animal information and return to the Home screen.

NOTE:
- **In case of emergency, you can perform an exam directly without animal information entry.**
- **When an image or cine is frozen, the system automatically generates an animal ID.**

5.1.2 Retrieve Animal Information (Station)

For animal information stored on the local hard disk, you can obtain animal information through the Station screen.

To retrieve animal information, perform the following steps:

1. Press **<Station>** key to enter the Station screen.

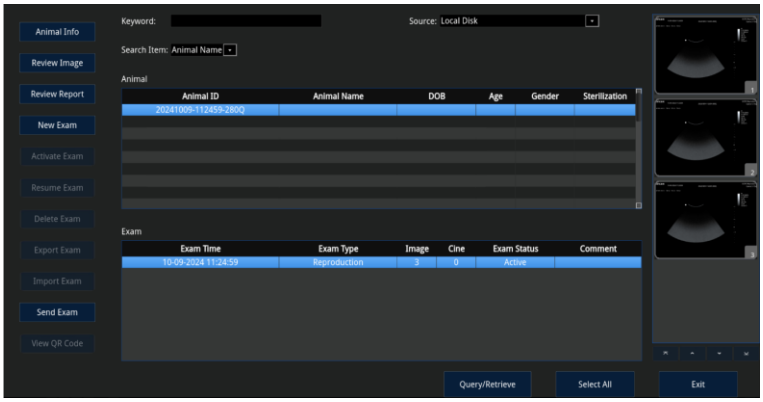

Figure 35 Station Screen

2. Click **[Source]** drop-down box to select the storage location of the desired animal information.
3. Search for the desired animal.

Item	Description
Keyword	Enter the keyword for the search item. The animal list shows the animals who meet the requirements, the exam list shows all the exams under the selected animals, and the system defaults to select the first animal in the animal list.
Search Item	Click **[Search Item]** drop-down box to select a search item among animal name, animal ID, DOB, and exam date.

4. Select the desired animal and press the **[Set]** button to open the operation menu.

Item	Description
Animal Info	Click to enter the animal information screen, and view the selected animal information.
Review Image	Click to enter the review screen, and review the images of the selected exam.
Review Report	Click to enter the report screen and review the selected report. (unavailable for canceled exams)
New Exam	Click to create a new exam for the selected animal.
Activate Exam	Click to activate and continue an ended exam.
Resume Exam	Click to continue a paused exam.
Delete Exam	Click to delete the selected exam.

Item	Description
Export Exam	Click to export the selected exam to the storage media supported by the system.
Import Exam	Click to import animal information from other media to the system.
Send Exam	Click to send the selected exam to the external storage media, DICOM server or printer.
View QR Code	Click to view the QR code and link for animal data that has been sent to zStorage. Refer to “10.5.3.2 Transfer Animal Data to Electronic Device via Wi-Fi” for details.
Query / Retrieve	Click to view animal information stored on the DICOM server.
Select All Exams	Click to select all animals and exams for batch operations.
Exit	Click to exit Station screen and return to the Home screen.
^ / ^	Click to go to the previous/next page.
⌅ / ⌄	Click to go to the first/last page.

5.1.3 Retrieve Animal Information (DICOM)

After the system is connected to the DICOM server and the worklist server is set up (refer to “11.1.2.3 Worklist” for more information). You can remotely query or import animal information via the worklist server. Refer to “11.2.3 DICOM Worklist” for details.

5.2 Select Probe and Exam Mode

NOTE:
- **If the exam mode is switched during the measurement, all general measurement data will be cleared while the application measurement data will be saved in the report.**
- **Freeze the image or shut down the system power before connecting or removing the probe. Otherwise, system and probe damage may result.**
- **After replacing the probe, please switch over to the new probe on the Probe / Exam mode screen.**

To select probe / exam mode, perform the following steps:

1. Connect the probes to the probe receptacle. (Refer to “3.6 Connect / Remove the Probe” for details).
2. Press **[Probe]** button on the control panel to enter the Probe / Exam mode screen. Connected probes and corresponding exam modes are displayed on the touch screen.

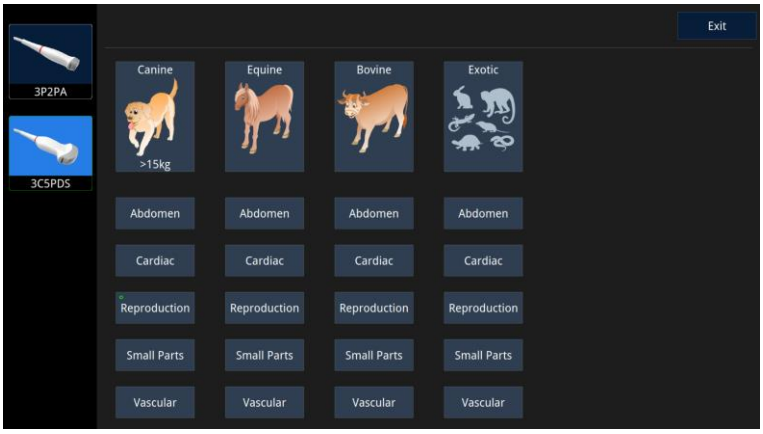

Figure 36 Probe/Exam Mode Screen

3. Click the probe icon to select an appropriate probe.
4. Select the desired exam mode and the system enters the corresponding exam mode.
    - Double-clicking a probe icon selects the probe and enters its default exam mode automatically.

5.3 Select Imaging Mode

Select an appropriate imaging mode. Refer to “Chapter 6 Optimizing the Image” for more information of each imaging mode.

5.4 Resume/Activate Exam

5.4.1 Resume Exam

To resume a paused exam, perform the following steps:

1. Press **<Station>** key to enter the Station screen.
2. Select the desired animal and exam.
3. Click **[Resume Exam]** to load the animal’s basic information and measurement data to resume the previously paused exam.

5.4.2 Activate Exam

For animals whose exam has ended but need to be re-examined, perform the following steps:

1. Press **<Station>** key to enter the Station screen.
2. Select the desired animal and exam.
3. Click **[Activate Exam]** to load the animal’s basic information and measurement data to activated and resume the previously ended exam.

5.5 Cancel / End Exam

5.5.1 Cancel Exam

To cancel an exam, perform the following steps:

1. Press the **[Patient]** button on the control panel to enter the animal information screen.
2. Click **[Cancel Exam]** to pop up the Cancel exam dialog box.
3. Click **[OK]** to cancel the exam or **[Cancel]** to resume the current exam.

5.5.2 End Exam

To avoid data chaos between different animals and measurement items, end the current exam before proceeding to the next exam.

1. To end the current exam:
   - Press the **[EndExam]** button on the control panel.
   - Press the **[Patient]** button on the control panel to enter the animal information screen. Click **[New Animal]** or **[New Exam]**.
2. The end exam dialog box pops up. Click **[OK]** to save the current animal data and exit the current exam.

Chapter 6 Optimizing the Image

6.1 Imaging Mode

The system offers a set of imaging modes to accommodate a variety of imaging applications. Special modes are also available for panoramic imaging, elastography, and TDI imaging.

The system supports following imaging modes:

Imaging Type	Imaging Mode
B	B-mode, 2B mode, 4B mode
M	M-mode, Anatomic M mode, Color M mode
Color	Color mode, PDI mode, DPDI mode
Doppler	CW mode, PW mode
Special	Panoramic imaging, Elastography, TDI imaging

6.2 Operation Interface

The operating interface of this system consists of a Home screen and a touch screen. The Home screen utilizes the trackball, cursor, and keyboard in conjunction to perform operations. The touchscreen, on the other hand, involves using finger taps and knobs on the control panel to carry out corresponding operations. For details, please refer to “3.12 Barcode Reader” and each chapter.

6.3 B-mode

The B-mode imaging uses a multi-beam scanning method to form each scanning line into a 2D grayscale image, and displays the strength of the tissue echo signal by the intensity of the brightness.

B-mode imaging is the most basic imaging mode by displaying the anatomical structure of tissues and organs in real time.

B-mode can also be used together with other modes.

6.3.1 Basic Procedure of B-mode

To perform B-mode imaging, perform the following steps:

1. Start a new exam.
2. Select an appropriate probe and exam mode, the system enters B-mode by

default or press the **[B]** knob on the control panel to enter B-mode.

3. Optimize the image. (Refer to “6.3.2 Image Optimization (B)” for details)

   The parameter area provides real-time parameter information of the B mode. The meanings of each parameter are as follows:

Parameter	B (2D) Mode
F	Working Frequency (MHz)
D	Depth
G	Gain (dB)
FR	Frame Frequency
DR	Dynamic Range
ZClear	Image Enhancement

4. Perform measurements and calculations as needed.

6.3.2 Image Optimization (B)

The screen displays the relevant imaging parameters and image options.

You can optimize the B image by tapping the corresponding parameter on the touch screen or by rotating/pressing the corresponding knob on the control panel.

6.3.2.1 Gain

The gain is used to adjust the brightness of the B image. You can brighten the image and observe more echo signals by increasing the gain. However, with increased gain, more noise would be introduced.

Operation:

Rotate the **[B]** knob on the control panel to adjust the gain value.

6.3.2.2 TGC

The TGC controls compensation for signal attenuation as depth increases by varying the gain of the received signals at a specific depth.

Operation:

Move the eight TGC sliders on the control panel to adjust the brightness of the segmented image of the corresponding depth.

6.3.2.3 LGC

The LGC improves the lateral resolution of the image by adjusting the gain of the direction of the scanning line. The LGC curve is displayed above the image area when adjusting.

Operation:

- Click **[LGC]** on the touch screen to enter the adjustment interface, and the touch screen displays the 10-segment control slider.
- Move the corresponding slider to adjust the corresponding transverse segmentation image.

6.3.2.4 Depth

Depth controls the field of view. Increase the depth to look at a deeper or larger tissue structure, decrease the depth to look at tissue structures near the skin line. Increase the depth tends to decrease the frame rate.

Operation:

Toggle the **[Depth]** control on the control panel up and down to adjust the image depth.

NOTE: Adjustable range depends on the current probe. The actual depth is shown in mm in the image parameter area.

6.3.2.5 Steer

Steer control is used to deflect the direction of beam without moving the probe.

NOTE: Applicable to linear probes only.

Operation:

Rotate the **[Angle/Steer]** knob on the control panel to adjust the direction of the ultrasonic beam.

6.3.2.6 Auto-optimization

The system automatically optimizes image parameters based on the tissue characteristics of the current scan area.

When auto-optimization function is enabled, an “Auto” mark is displayed in the image parameter area.

Operation:

Press the **[Auto]** knob on the control panel to enable/disable auto optimization.

6.3.2.7 Image Quality

Adjust image quality by controlling the frequency. User selects the appropriate frequency type and frequency value based on the depth of scanning and tissue characteristics to achieve optimal imaging results.

The fundamental wave is marked with an “F” while the harmonic wave is marked with an “F H”.

Operation:

1. Press the knob under **[Image Quality]** to switch between **[Fundamental Frequency]** and **[Harmonic Frequency]**.
2. Rotate the knob under **[Image Quality]** to select the frequency.

- Fundamental frequency options: Pen (Penetration priority), Gen (General imaging), Res (Resolution priority)
- Harmonic frequency options: HPen (Penetration priority), HGen (General imaging), HRes (Resolution priority), HPen-Gen (between Penetration and General)

NOTE: Adjustable range depends on the current probe.

6.3.2.8 Dynamic Range

Change the display range of the grayscale to adjust the contrast of the image.

Operation:

Rotate the knob under **[Dyn Ra.]** to adjust the dynamic range.

6.3.2.9 Persistence

Superimpose and average the images of adjacent frames to remove the noise and enhance the details. Low persistence can improve live images and is better for fast-moving organs, while high persistence can reduce noise and improve image clarity.

Operation:

Rotate the knob under **[Persistence]** to adjust the persistence value.

6.3.2.10 ZClear

Used to enhance image contrast, smooth images and reduce noise.

Operation:

Rotate the knob under **[ZClear]** to adjust the image enhancement.

6.3.2.11 Gray Map

Optimize the images by adjusting the black-white contrast of the image.

Operation:

Rotate the knob under **[Gray Map]** to adjust the grayscale.

6.3.2.12 Field of View

Change the scan range without moving the probe or ROI box.

You can get a wider scan range with a larger field of view (FOV). A larger FOV trends to decrease the frame rate.

Operation:

Tap **[<]** / **[>]** of **[Field of View]** on the touch screen to adjust the scan range.

6.3.2.13 Compound Imaging

Compound imaging is the process of merging frames of different steering angles into a single frame. This function is used to improve the spatial resolution and signal-to-noise ratio of the image, making the image subtle and clean.

There are two types of compound imaging: SCI (Spatial Compound Imaging) and FCI (Frequency Compound Imaging).

SCI and FCI cannot be used simultaneously. When one of the compounds imaging types is activated, the other type will automatically turn off. Also, SCI may not be used in conjunction with Extended Filed-of-View (EFOV) and FCI may not be used in conjunction with harmonic imaging.

- **SCI (Spatial Compound Imaging)**

NOTE: SCI is not available for phased array probes.

Operation:

Tap **[<]** / **[>]** of **[SCI]** on the touch screen to adjust SCI levels.

- **FCI (Frequency Compound Imaging)**

FCI is only available for the fundamental frequency.

Operation:

Tap **[<]**/ **[>]** of **[FCI]** on the touch screen to adjust FCI level.

6.3.2.14 Line Density

Line density determines the number of the ultrasonic scanning lines of a certain width or angle. The higher the line density, the higher the lateral resolution of the image and the lower the frame rate.

Operation:

Tap **[<]**/ **[>]** of **[Line Density]** on the touch screen to adjust line density level.

6.3.2.15 Chroma

Replace grayscale distinction with color distinction to intuitively show grayscale level of the images. Chroma color is displayed on the grayscale bar.

Operation:

Tap **[<]** / **[>]** of **[Chroma]** on the touch screen to change the color.

6.3.2.16 EFOV (Extended field-of-view)

When the extended imaging function is enabled, trapezoidal imaging (for linear array probes) or extended scanning angle (for convex array) will be displayed.

Operation:

Tap **[>]** on the touch screen to turn the page, and then tap **[<]** / **[>]** of **[EFOV]** to adjust the EFOV level.

6.3.2.17 TSI

Select the acoustic velocity according to the scanning parts to highlight the tissue texture.

Operation:

Tap **[>]** on touch screen to turn the page, and then tap **[<] / [>]** of **[TSI]** to select the tissue

texture. Select **[Auto]** to set automated TSI.

6.3.2.18 Image Rotation

Change the orientation of the image display.

Operation:

- Tap **[>]** on the touch screen to turn on the page and then tap **[<]** / **[>]** of **[Rotation]** on the touch screen to change the image display.
- Rotation options: 0°, 90°, 180°, and 270°.

NOTE: "Z" of the image corresponds to the orientation mark on the probe.

6.3.2.19 Focus Position/Number

Adjust the focus of the ultrasonic beam to increase the resolution of the particular area and optimize the image.

The focus symbol "" is displayed on the image depth scale.

➢ **Adjust the focus position**

Toggle the **[Focus]** control on the control panel up and down to adjust the focus position.

➢ **Adjust the focus number**

Tap **[>]** on touch screen to turn the page, and then tap **[<] / [>]** of **[Focus number]** to adjust the number of focus.

NOTE:
- **Disable the SCI function before adjusting the focus number.**
- **Phased array probe does not support adjusting the focus number.**

6.3.2.20 Acoustic Power

Adjust the acoustic power of current selected probe in B-mode. Acoustic power value is displayed at the top of the screen.

Operation:

Tap **[>]** on touch screen to turn the page, and then tap **[<] / [>]** of **[A.Power]** to adjust the acoustic power.

6.3.2.21 Image Reverse

Reverse the image orientation horizontally or vertically for better observation.

Operation:

Tap **[UD Reverse]** or **[LR Reverse]** on the touch screen to turn on/off the image reverse function.

6.3.2.22 Dual Live

Display different image effects with two live images of one probe for better observation.

Operation:

Tap **[Dual Live]** on the touch screen to turn on/off the function.

A dual-split window displays on the screen and you can adjust the parameters of two B images via two tabs on the touch screen where shared and left image parameters displayed on **[B(L)]** tab while right image parameters displayed on **[B(R)]** tab.

6.3.2.23 Quad

Display four B images with different parameters of one probe. (refer to “7.1.2 Quad-Split Display” for details)

6.3.2.24 Horizontal Scale

Display or hide the horizontal scale.

Operation:

Tap **[H scale]** on the touch screen to turn on/off the function.

6.3.2.25 Center Line

Center line assists in locating the position of the shockwave during lithotripsy treatment. Meanwhile, by monitoring the treatment process with real-time ultrasound images, the intensity and frequency of the shockwave can be appropriately adjusted to minimize the damage to human body.

Operation:

Tap **[Center Line]** on the touch screen to display or hide the centerline.

6.3.2.26 Auto Merge

In dual-split mode, when the images of the two windows have the same probe, depth, invert/rotation status, and magnification factor, the system will merge the two images to extend the field of view.

NOTE: Auto Merge is available only for linear probes.

Operation:

Tap **[Auto Merge]** on the touch screen to enable/disable the auto merge function.

6.3.2.27 Center Point

Indicate the central reference position. When enabled, a blue downward triangle appears at the top center of the image.

NOTE: Available only for linear and convex probes.

Operation:

Tap **[Center Point]** on the touch screen to turn on/off the function.

6.4 M-mode

M-Mode is used to determine patterns of motion for objects along the M-line. The most common use is for viewing motion patterns of the heart.

6.4.1 Basic Procedure of M-mode

To perform an M-mode imaging:

1. Optimize the B-mode image to make the image sharper.
2. Press the **[M]** knob on the control panel to enter the pre-active M-mode, and M-line is displayed on the B-mode image.
3. Roll the trackball to adjust the position of the M-line.
4. Press the **[M]** knob or the **[Update]** button on the control panel to enter the M-mode. The image is divided into two parts: B-mode image at the top and M-mode image at the bottom.
   - X axis: displays time
   - Y axis: displays the tissue position or depth
5. Move the M-line on B-mode image with the trackball; you can learn the movement of the anatomy along the M-line in the M-mode image.
6. Optimize the M-mode image. Refer to “6.4.2 Image Optimization (M)” for details.

   The parameter area on the right side of the screen provides real-time parameter information of the M-mode. The meanings of each parameter are as follows:

Parameter	M-mode
F	Working Frequency (MHz)
D	Depth
G	Gain (dB)
V	Velocity
DR	Dynamic Range

7. Perform measurements and calculations as needed.

6.4.2 Image Optimization (M)

The screen displays the relevant imaging parameters and image options.

You can optimize the M image by tapping the corresponding parameter on the touch screen or by rotating/pressing the corresponding knob on the control panel.

6.4.2.1 Gain

The gain is used to adjust the brightness of the M image. You can brighten the image and observe more echo signals by increasing the gain. However, with increased gain, more noise would be introduced.

Operation:

In M-mode, rotate the **[M]** knob on the control panel to adjust the gain value.

6.4.2.2 Dynamic Range

Change the display range of the grayscale to adjust the contrast of the image.

Operation:

Rotate the knob under **[Dyn Ra.]** to adjust the dynamic range.

6.4.2.3 Gray Map

Optimize the images by adjusting the black-white contrast of the image.

Operation:

Rotate the knob under **[Gray Map]** to adjust the gray map.

6.4.2.4 Speed

Control the scanning speed of M mode imaging.

Operation:

Rotate the knob under **[Speed]** to adjust the M speed.

6.4.2.5 Chroma

Replace grayscale distinction with color distinction to intuitively show grayscale level of the images.

Operation:

Rotate the knob under **[Chroma]** to change the selection color.

6.4.2.6 Display Format

Change the display format of B image and M image for easy comparison of images.

Operation:

Tap **[Display Format]** on the touch screen to select the appropriate display format.

6.5 Color Mode

Color mode is also a Doppler mode to provide blood flow information in colors. Color mode includes basic color mode and PDI mode.

NOTE: Acoustic power in Color mode is synchronous with that of B-mode. Tap the

mode tab on the touch screen to toggle the imaging modes.

6.5.1 Basic Procedure of Color Mode

The Color mode is used to visually detect the direction and speed of blood flow in the vessels. Typically, the color above the color bar baseline indicates the flow towards the probe; while color below the color bar baseline indicates the flow away from the probe.

The brighter the color, the faster the blood flows; the darker the color, the slower the blood flows.

To perform a color mode imaging:

1. Observe the anatomical structure, adjust the B-mode image and probe to make the target area at the center of the B-mode image.
2. Press the **[C]** knob on the control panel to enter Color-mode.
3. Adjust the position and size of the ROI box.
   - Press the **[Set]** button to toggle the ROI box between solid line and dotted line status.
   - When the ROI box is solid line, roll the trackball to adjust the position of the ROI box.
   - When the ROI box is dotted line, roll the trackball to adjust the size of the ROI box.
4. Optimize the image. (Refer to “6.5.3 Image Optimization (Color/PDI)” for details)

   The parameter area on the right side of the screen provides real-time parameter information of the Color mode. The meanings of each parameter are as follows:

Parameter	Color-mode
F	Working Frequency (MHz)
G	Gain (dB)
WF	Wall Filter
PRF	Pulse Repetition Frequency

5. Perform measurements and calculations as needed.
6. Press the **[C]** knob on the control panel to exit the Color mode.

6.5.2 Basic Procedure of PDI mode

Power Doppler Imaging (PDI) is used to show the presence or absence of blood flow and to reflect the density of red blood cells.

NOTE: PDI mode only provides perfusion information of blood flow, but cannot indicate the direction and speed of blood flow.

To perform a PDI mode imaging:

1. Observe the anatomical structure, adjust the B-mode image and probe to make the target area at the center of the B-mode image.

2. Press the **[PDI]** button on the control panel to enter PDI mode.
3. Adjust the position and size of the ROI box.
   - Press the **[Set]** button to toggle the ROI box between solid line and dotted line status.
   - When the ROI box is solid line, roll the trackball to adjust the position of the ROI box.
   - When the ROI box is dotted line, roll the trackball to adjust the size of the ROI box.
4. Optimize the image. (Refer to “6.5.3 Image Optimization (Color/PDI)”)

   The parameter area on the right side of the screen provides real-time parameter information of the PDI mode. The meanings of each parameter are as follows:

Parameter	PDI-mode
F	Working Frequency (MHz)
G	Gain (dB)
WF	Wall Filter
PRF	Pulse Repetition Frequency

5. Perform measurements and calculations as needed.
6. Press the **[PDI]** button on the control panel to exit the PDI mode.

6.5.3 Image Optimization (Color/PDI)

The screen displays the relevant imaging parameters and image options.

You can optimize the color/PDI image by tapping the corresponding parameter on the touch screen or by rotating/pressing the corresponding knob on the control panel.

6.5.3.1 Gain

Adjust the overall sensitivity of flow signals.

Operation:

Rotate the **[C]** knob on the control panel to adjust the Color/PDI gain value.

6.5.3.2 Image Quality

Adjust the frequency of current selected probe in Doppler mode.

Operation:

- Rotate the knob under **[Image Quality]** to select the frequency.
- Fundamental frequency options: Pen (Penetration priority), Gen (General imaging), Res (Resolution priority).

6.5.3.3 Scale

Adjust the speed range of color flow by changing the PRF.

Operation:

Rotate the knob under **[Scale]** to adjust the PRF value.

NOTE: Select appropriate PRF to match the flow velocity. Aliasing may result if low PRF is used for high flow velocity or small signal loss may result if high PRF is used for low flow velocity.

6.5.3.4 Smooth

Suppress noise and smooth the image.

Operation:

Rotate the knob under **[Smooth]** to adjust the smooth level.

6.5.3.5 Persistence

Superimpose and average the images of adjacent frames to remove the noise and enhance the details.

Operation:

Rotate the knob under **[Persistence]** to adjust the persistence level.

6.5.3.6 Color Map

- **Color**

Multiple sets of color maps are provided to optimize color flow display. This system provides multiple different maps for users to choose from. The ordinary map is marked with “V” while 2D map is marked with “VV”. The chosen spectrum color map is displayed on the color bar on the right side of the screen.

Operation:

Rotate the knob under **[Color Map]** to choose the color map.

- **PDI**

Provide different display effects for PDI images, for which maps are grouped into two categories: Power maps and Directional Power maps. This system provides 8 different effect maps for users to choose from. The power maps are P0-3 while the directional power maps are dP0-3. Directional power maps also show information of blood flow direction.

Operation:

Rotate the knob under **[Color Map]** to choose the color map.

6.5.3.7 Line Density

Line density determines the number of the ultrasonic scanning lines of a certain width or angle. An increase of line density will improve lateral resolution of the image, but this will also decrease the frame rate.

Operation:

Tap **[<]**/ **[>]** of **[Line Density]** on the touch screen to adjust line density level.

6.5.3.8 Sensitivity

Reflect the ability to reflect minimal detectable blood flow which is used to adjust the accuracy of color flow display. The higher the sensitivity, the more sensitive the response to low-speed blood flow and small blood vessel signals, and the better the image quality.

Operation:

Tap **[<]** / **[>]** of **[Sensitivity]** on the touch screen to adjust the sensitivity.

6.5.3.9 Flow State

Optimize images of different blood flow states.

Operation:

Tap **[<]** / **[>]** of **[Flow State]** on the touch screen to adjust the flow state.

6.5.3.10 Wall Filter

Filter low frequency noise to reduce the impacts of breathing and other activities.

Operation:

Tap **[<]** / **[>]** of **[Wall Filter]** on the touch screen to adjust the filtering value.

6.5.3.11 Baseline

Calibrate the 0 position of the color bar for the best blood flow speed display.

NOTE: Baseline function is unavailable for PDI mode.

Operation:

Tap **[<]** / **[>]** of **[Baseline]** on the touch screen to adjust the baseline.

6.5.3.12 Priority

Set the priority to display blood flow information by color signals or gray signals.

The larger the value, color signals are prior to display; while the smaller the value, gray signals are prior to display.

Operation:

Tap **[>]** on touch screen to turn the page, and then tap **[<] / [>]** of **[Priority]** to adjust the color priority value.

6.5.3.13 Invert

Invert the blood flow direction displayed in color bar.

By default, red color indicates the blood flow towards the probe; while blue color indicates the blood flow away from the probe. When the invert function is enabled, blue color indicates the blood flow towards the probe; while red color indicates the blood flow away from the probe.

The color flow image and the color bars on the right side of the image will change

accordingly.

Operation:

- Tap **[Invert]** on the touch screen to turn on/off the invert function.
- Tap **[Auto-Invert]** on the touch screen to turn on/off the auto-invert function. (Only applicable for linear probes)

6.5.3.14 Dual Live

Display B and C images of one probe at the same time.

Operation:

Tap **[Dual Live]** on the touch screen to enable / disable the function of displaying B and C live images at the same time.

6.5.3.15 B/C Align

Set the maximum width of the B images the same width as the ROI box.

Operation:

Tap **[B/C Align]** on the touch screen to turn on/off the function.

6.5.3.16 Quad

Display four images with different parameters of one probe. (refer to “7.1.2 Quad-Split Display” for details)

6.5.3.17 Velocity Tag

Mark the flow at a specified velocity range for regional blood flow velocity observation.

NOTE:
- **Only applicable for Color mode.**
- **Press the [Set] button to switch between setting the marking position and selecting the marking range.**

Operation:

1. Tap **[Velocity Tag]** on the touch screen to turn on/off the function.
   - A green mark appears on the color bar.
2. Roll the trackball to set the marking position.
3. Press the **[Set]** button to switch to marking range selection.
4. Roll the trackball to select the marking range.
   - The velocity within the marking range is displayed in the image parameter area.

6.5.3.18 Color Hide

Only black-and-white images are displayed when the color hiding function is on. Both color and black-and-white images are displayed when the function is off.

Operation:

Tap **[Color Hide]** on the touch screen to enable / disable the color hide function.

6.5.3.19 High Resolution Flow

Enhance the resolution of flow Image.

NOTE: Only applicable for Color mode.

Operation:

Tap **[HR Flow]** on the touch screen to turn on/off the function.

6.5.3.20 Flow Tracking

Locate flow automatically.

NOTE: Only applicable for linear probes.

Operation:

In Color mode, press the **[Auto]** knob on the control panel. The ROI box automatically locates the blood flow position, and the image is also optimized.

6.5.3.21 zMicroFlow

Display more vessel information, especially blood flow information of low-speed small vessels.

NOTE: Only applicable for PDI mode.

Operation:

Tap **[zMicroFlow]** on the touch screen to turn on/off the function.

6.5.3.22 Dynamic Range

Adjust the transformation of echo intensity into color signal.

NOTE: Not applicable for Color mode.

Operation:

In PDI mode, tap **[<]** / **[>]** of **[Dyn Ra.]** on the touch screen to adjust the dynamic range.

6.5.3.23 Steer

Steer control is used to deflect the direction of beam without moving the probe.

NOTE: Applicable to linear probes only.

Operation:

Rotate the **[Angle/Steer]** knob on the control panel to adjust the direction of the ultrasonic beam; or tap **[<]** / **[>]** of [**[Steer]** on the touch screen to precisely adjust the direction.

6.6 Doppler Imaging Mode

Doppler imaging is primarily used to provide blood flow velocity information and to indicate blood flow direction, type (e.g. arterial blood flow, venous blood flow) and properties.

Doppler imaging includes PW (Pulsed Wave Doppler) mode and CW (Continuous Wave Doppler) mode. PW mode displays regional blood flow velocity, direction and properties at a certain depth; CW mode is often used to display high-speed blood flow frequency. The combination of the two modes improves the accuracy of the diagnosis.

6.6.1 Basic Procedure of PW-mode

PW (Pulsed Wave Doppler) mode is used to learn the movement information of blood flow along a scanning line in a certain area. PW mode includes common pulse mode and high pulse repetition frequency (HPRF) mode.

To perform a PW-mode imaging:

1. Observe the anatomical structure, adjust the B-mode image and probe to make the target area at the center of the B-mode image.
2. Press the **[PW]** knob on the control panel to enter the pre-activated PW mode.

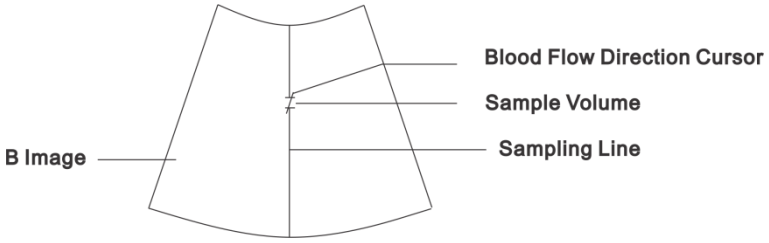

Figure 37 Pre-activated PW-mode

3. Adjust the sampling line and sampling depth to determine the sample volume in the target area.
   - Roll the trackball left and right to adjust the position of the sampling line.
   - Roll the trackball up and down to adjust the sample volume.
4. Adjust the sample volume and the cursor angle of blood flow direction.
   - Rotate the knob under **[SV]** to adjust the sample volume.
   - Rotate the **[Angle/Steer]** knob on the control panel to adjust the angle between the blood flow direction cursor and flow.
   - You can also tap **[Quick Angle]** on touch screen to quickly switch among -60°, 0, 60°.
5. Press the **[PW]** knob or the **[Update]** button on the control panel to enter the PW-mode.

   After entering PW-mode, the image area is divided into two parts: B-mode image at the top and PW-mode image at the bottom.
   - The X axis indicates time.

- The Y-axis indicates frequency change, and can also indicate the speed of forward or reverse direction after calibration.
- Press the **[Update]** button on the control panel to toggle between B-mode and pre-activated PW-mode.
- You can adjust the size and depth of sample volume and the cursor angle of the blood flow during exam.
- Tap **[>]** on touch screen to turn the page, and then tap **[<] / [>]** of **[Volume]** to adjust the volume of the Doppler.

6. Optimize the image.(Refer to “6.6.3 Image Optimization (PW/CW)” for details)

   The parameter area on the right side of the screen provides real-time parameter information of PW mode. The meanings of each parameter are as follows:

Parameter	PW-Mode
F	Working Frequency (MHz)
G	Gain (dB)
WF	Wall Filter
SVD	Sample Volume Depth
SV	Sample Volume
PRF	Pulse Repetition Frequency
Angle	Correction Angle

7. Perform measurements and calculations as needed to obtain valid information.
8. Press the **[PW]** knob on the control panel to exit the PW mode.

6.6.2 Basic Procedure of CW mode

The CW (Continuous Wave Doppler) mode collects blood flow signals and data along the spectral sampling line and is used to detect high-speed blood flow.

NOTE: CW mode is only available for phased array probes.

To perform a CW mode imaging:

1. Observe the anatomical structure, adjust the B-mode image and probe to make the target area at the center of the B-mode image.
2. Press the **[CW]** button on the control panel to enter the pre-activated CW-mode.

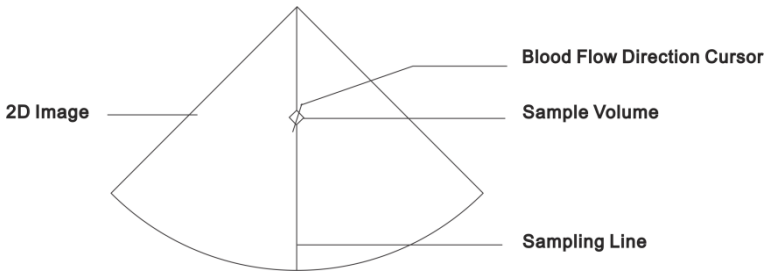

Figure 38 Pre-activated CW mode

3. Adjust the sampling line and sampling depth to determine the sample volume in the target area.
   - Roll the trackball left and right to adjust the position of the sampling line.
   - Roll the trackball up and down to adjust the sample volume.
4. Adjust the cursor angle of blood flow direction.
   - Rotate the **[Angle/Steer]** knob on the control panel to adjust the blood flow direction cursor angle.
   - You can also tap **[Quick Angle]** on touch screen to quickly switch among -60°, 0, 60°.
5. Press the **[CW]** button or the **[Update]** button on the control panel to enter the CW-mode.

   After entering CW-mode, the image area is divided into two parts: B-mode image at the top and CW-mode image at the bottom.
   - The X axis indicates time.
   - The Y-axis indicates frequency change, and can also indicate the speed of forward or reverse direction after calibration.
   - Press the **[Update]** button on the control panel to toggle between B-mode and CW-mode.
   - You can adjust the size and depth of sample volume and the cursor angle of the blood flow during exam.
   - Tap **[>]** on touch screen to turn the page, and then tap **[<] / [>]** of **[Volume]** to adjust the volume of the Doppler.
6. Optimize the image.(Refer to “6.6.3 Image Optimization (PW/CW)” for details)

   The parameter area on the right side of the screen provides real-time parameter information of CW mode. The meanings of each parameter are as follows:

Parameter	CW Mode
F	Working Frequency (MHz)
G	Gain (dB)
WF	Wall Filter
SVD	Sample Volume Depth
SV	Sample Volume

Parameter	CW Mode
PRF	Pulse Repetition Frequency
Angle	Correction Angle

7. Perform measurements and calculations as needed.
8. Press the **[CW]** button on the control panel to exit the CW mode.

6.6.3 Image Optimization (PW/CW)

The screen displays the relevant imaging parameters and image options.

You can optimize the PW/CW image by tapping the corresponding parameter on the touch screen or by rotating/pressing the corresponding knob on the control panel.

6.6.3.1 Gain

Increase or decrease the echo signal strength displayed in the image.

Operation:

Rotate the **[PW]** knob on the control panel to adjust the PW/CW gain value.

6.6.3.2 Steer

Steer control is used to deflect the direction of beam without moving the probe.

NOTE: Applicable to linear probes only.

Operation:

Press and then rotate the **[Angle/Steer]** knob on the control panel to adjust the direction of the ultrasonic beam; or tap **[<]** / **[>]** of [**[Steer]** on the touch screen to precisely adjust the direction.

6.6.3.3 Auto-optimization

The system automatically optimizes image parameters based on the tissue characteristics of the current scan area.

Operation:

Press the **[Auto]** knob on the control panel to enable/disable auto optimization.

- Every time you press **[Auto]**, the current image is re-optimized.

6.6.3.4 Image Quality

Adjust the transmission frequency of the probe in Doppler mode. The higher the frequency, the higher the resolution and sensitivity, but the penetrating power is reduced. Select appropriate probe frequency based on the detection depth and tissue texture.

Operation:

- Rotate the knob under **[Image Quality]** to select the frequency.
- Options: Pen (Penetration priority), Gen (General imaging), Res (Resolution

priority)

6.6.3.5 Scale

Adjust the speed range of color flow by changing the PRF.

Operation:

Rotate the knob under **[Scale]** to adjust the PRF value.

NOTE: Select appropriate PRF to match the flow velocity. Aliasing may result if low PRF is used for high flow velocity or small signal loss may result if high PRF is used for low flow velocity.

6.6.3.6 Sampling Volume (SV)

Adjust the width of sampling volume.

NOTE: Applicable to PW mode only.

Operation:

Rotate the knob under **[SV]** to adjust the sample volume.

6.6.3.7 Speed

Control the imaging speed.

Operation:

Rotate the navigation knob to display **[Speed]**, and then rotate the knob under **[Speed]** to adjust the imaging speed.

6.6.3.8 Baseline

Calibrate the 0 position of the scale for the best blood flow speed display.

Operation:

Rotate the knob under **[Baseline]** to adjust the baseline.

6.6.3.9 Chroma

Replace grayscale distinction with color distinction to intuitively show grayscale level of the images.

Operation:

Tap **[<] / [>]** of **[Chroma]** on the touch screen to change the color.

6.6.3.10 Dynamic Range

Change the display range of the grayscale to adjust the contrast of the image.

Operation:

Tap **[<] / [>]** of **[Dyn Ra.]** on the touch screen to adjust the dynamic range.

6.6.3.11 Trace Area

Set the trace area of the Doppler wave in the spectrum map.

Operation:

Tap **[<] / [>]** of **[Trace Area]** on the touch screen to set the Doppler image tracing range.

6.6.3.12 Wall Filter

Filter low frequency noise to reduce the impacts of breathing and other activities.

Operation:

Tap **[<]** / **[>]** of **[Wall Filter]** on the touch screen to quickly adjust the filtering value.

6.6.3.13 Angle

Adjust the angle of the blood flow direction cursor.

Operation:

Rotate the **[Angle/Steer]** knob on the control panel to adjust the angle; or tap **[<]** / **[>]** of **[Quick Angle]** on the touch screen to adjust the angle faster by 60 degrees.

6.6.3.14 Auto Calculation

Trace the spectral Doppler wave and perform parameter calculations. The results of the automatic calculation will be displayed in the measurement results window.

In the real-time state, the automatic spectrum results obtained from the latest or more cardiac cycles are always displayed; in the frozen and cine replay state, the corresponding measurement results of the traced area are displayed.

Operation:

1. Tap **[>]** on touch screen to turn the page, and then tap **[Auto Calc]** on the touch screen to turn on the auto calculation function.
2. Tap **[Auto Calc Para]** on the touch screen to select the parameter items.
3. Tap **[<]** / **[>]** of **[Auto Calc Cycle]** on the touch screen to select the cardiac cycles for calculation.

6.6.3.15 T/F Resolution

Obtain quality images by adjusting time resolution and spatial resolution.

Operation:

Tap **[>]** on touch screen to turn the page, and then tap **[<] / [>]** of **[T/F Resolution]** to adjust the T/F resolution level.

6.6.3.16 Gray Map

Optimize the images by adjusting the black-white contrast of the image.

Operation:

Tap **[>]** on touch screen to turn the page, and then tap **[<] / [>]** of **[Gray Map]** to adjust the

gray map.

6.6.3.17 Volume

Control and adjust the audio volume produced by the spectral Doppler which helps to determine the blood flow state and properties more effectively.

Operation:

Tap **[>]** on touch screen to turn the page, and then tap **[<] / [>]** of **[Volume]** to adjust the volume.

6.6.3.18 Invert

Flip the directions of the spectrum display.

Operation:

- Tap **[Invert]** on the touch screen to turn on/off the invert function.
- Tap **[Auto-Invert]** on the touch screen to turn on/off the auto-invert function. (Only applicable for linear probes)

6.6.3.19 Multi Sync

Display the PW image together with B image or with B+Color image at the same time.

NOTE: Applicable to PW mode only.

Operation:

Tap **[Multi Sync]** on the touch screen to turn on/off the function.

6.6.3.20 Display Format

Change the display format of B image and PW/CW image to facilitate comparison of images.

Operation:

Tap **[Display Format]** on the touch screen to select the appropriate display format.

6.6.3.21 High Pulse Repetition Frequency (HPRF)

HPRF mode is used when detected velocities exceed the processing capabilities of the currently selected PW Doppler scale, or when the selected anatomical site is too deep for the selected PW Doppler scale.

NOTE: Applicable to PW mode only.

Operation:

Tap **[HPRF]** on the touch screen to turn on/off HPRF function.

6.7 Anatomical M-mode

Anatomical M-mode imaging can analyze any part and direction of the 2D image, so as to

obtain the myocardial motion trajectory of the region of interest. Tissue information can be evaluated more accurately and comprehensively by comparing multiple sampling lines and images at different times. The system supports both linear anatomical M-mode and curved anatomical M-mode.

NOTE: Anatomical M-images are provided for reference only. When diagnosing, please combine other clinical data for comprehensive analysis.

6.7.1 Linear Anatomical M-mode

To perform an Anatomical M-mode imaging:

1. In B or M-mode, observe the anatomical structure, adjust the image and probe to make the target area at the center of the B-mode image.

   Or select the desired B mode cine file for imaging.

2. Tap **[Anatomical M]** on the touch screen or press the user-defined "**Anatomical M**" button to enter Anatomical M-mode. (For details of customizing a user-defined button, see "4.2.5 Customize".)

   The B sampling line is displayed by default on the B mode image, and the M image shows the motion trajectories of the sampling line.

3. Adjust sampling line. Green for activated while white for inactivated.
   - Position: roll the trackball to adjust the position of the sampling line.
   - Direction: rotate the **[Angle/Steer]** knob on the control panel to set the direction of the sampling line.
   - Display / Hide: tap **[Show A]**, **[Show B]** or **[Show C]** on the touch screen to display/hide the A, B, C sampling line. At least 1 sampling line shall be selected.
4. Optimize the image.（Refer to "6.4.2 Image Optimization (M)" for details）
5. Press the **[B]** knob on the control panel to exit the Anatomical M mode and return to the B-mode.

6.7.2 Curved Anatomical M-mode

NOTE: Only phased probe supports Curved Anatomical M-mode.

To perform a Curved Anatomical M-Mode imaging:

1. Before using anatomical M imaging, please set up user-defined button for anatomical M imaging. (Refer to "4.2.5 Customize")
2. In TVM mode (in M mode, press **<TDI>** and then press **[M]** or **[Update]** to enter the TVM mode), tap **[Anatomical M]** on the touch screen or press the user-defined "**Anatomical M**" button to activate the Curved Anatomical M-mode. (For details of customizing a user-defined button, see "4.2.5 Customize".)
3. Press the left **[Set]** button to define the start point of the sample line on the B image. The digital number "1" is marked beside the point.

4. Roll the trackball and press the left **[Set]** button to define the next point, and repeat to add more points.
5. Press the right **[Set]** button to finish the sample line.
6. Optimize the image as needed.

6.7.2.1 Edit the Curved Sample Line

To edit the curved sample line:

1. Tap **[Edit]** on the touch screen to enable curve (sample line) modification.
2. Move the cursor to a point to be modified, press the left **[Set]** button to activate the point, and then roll the trackball to drag the point as needed.
3. Repeat step 2 until a desired curve is achieved.
4. Press the right **[Set]** button to finish curve modification.

6.7.2.2 Delete the Curved sample line

Tap **[Delete]** on the touch screen to delete the current curve.

6.7.2.3 Undo the Point

Tap **[Undo]** on the touch screen to undo the last point.

6.8 Color M-mode

Color M-mode provides information of flow or tissue on the M-mode to indicate cardiac motion state.

For its sensitivities for motion signal changes, this mode provides more detailed diagnostic information.

To perform a Color M-mode imaging:

1. To enter the pre-activated Color M-mode:
   - **CFM (Color Flow M Mode)**
     - In B+M mode, press the **[C]** knob on the control panel.
     - In B+Color mode, B+Color+PW mode or B+Color+ CW mode, press the **[M]** knob on the control panel.
   - **TVM (Color Tissue M Mode)**
     - In CFM mode, press the **[Q2]** button on the control panel.
2. Adjust the color ROI box size and position.
   - Move the trackball left and right to adjust the position of sampling line, the color ROI box moves together with the sampling line.
   - Press the **[Set]** button to toggle between sampling line, solid line ROI box, and dotted line ROI box.
   - When the ROI box is solid line, roll the trackball to adjust the position of the ROI box.

- When the ROI box is dotted line, roll the trackball to adjust the size of the ROI box.

3. Press the **[M]** knob or **[Update]** button on the control panel to enter the Color M mode.
4. Optimize the Image. (For details, please refer to “6.4.2 Image Optimization (M)”.)

6.9 Tissue Doppler Imaging (TDI)

TDI mode is used to detect low-speed, high-intensity tissue motion information, so as to analyze myocardial wall motion.

NOTE: Applicable for phased array probes only.

6.9.1 TDI-modes

The ultrasonic system provides 4 tissue Doppler imaging modes for observing different tissue motion characteristics.

- TVI: to color code the speed and direction of the ventricular wall motion for myocardial velocity analysis.
- TEI: to color code the energy of the ventricular wall motion to observe myocardial blood supply.
- TVD: to display tissue motion within the ROI box in the direction of the sampled beam in the form of spectrogram for quantitative analysis of tissue motion.
- TVM: to provide intuitive color maps of tissue cardiogram and velocity information of myocardial motion.

6.9.2 Basic Procedure of TDI mode

To perform a TDI-mode imaging:

1. Enter the TDI mode.

   In the real-time state of the following modes, press the user-defined TDI button (it is set to **[Q2]** by default; to customize a new TDI button, see “4.2.5 Customize”) to enter the corresponding TDI mode:

   - In B or Color mode, press **[Q2]** to enter the TVI mode.
   - In PDI mode, press **[Q2]** to enter the TEI mode.
   - In PW pre-activated mode, press **[Q2]** and then press **[PW]** or **[Update]** to enter the TVD mode.
   - In M mode, press **[Q2]** and then press **[M]** or **[Update]** to enter the TVM mode.

2. Optimize the image.
3. Select TDI mode.
   - Press **[C]**, **[PW]**, **[M]**, **[PDI]** to toggle between the TDI modes.
4. Exit the TDI mode.

6.10 Panoramic Imaging

The panoramic imaging technology splices a series of real time 2D images into a continuous slice image, shows the whole picture of the anatomical region more intuitively and visually, and facilitates observation and measurement of the overall tissue texture. It is suitable for certain areas that require a larger field of view, such as the thyroid gland.

NOTE:
- **Panoramic Images are provided for reference only. When diagnosing, please combine other clinical data for comprehensive analysis.**
- **Panoramic imaging is an image splicing function. The quality of spliced images depends on the operator's technology to a certain extent. You may need to practice and master certain skills before you can get a satisfactory image. Therefore, there are certain risks in measurement.**

6.10.1 Basic Procedure of Panoramic Imaging

6.10.1.1 Precautions

- Make sure that the probe transducer and the scan path are evenly covered with enough coupling gel.
- Move the probe slowly and steadily.
- DO NOT shake, rotate or tilt the probe.
- DO NOT raise the probe or leave the skin surface, make sure that the probe is in vertical contact with the skin surface.
- DO NOT change the motion direction of the probe or move back and forth during scanning.
- Large scan depth usually requires a reduction in the probe moving speed.

6.10.1.2 Procedure

Perform the following steps:

1. In B or Color/PDI mode, tap **[Pano]** on the touch screen or press the user-defined "Pano" button to enter the pre-activated panoramic imaging move. (For details of customizing a user-defined button, see "4.2.5 Customize".) The ROI box displays on the image.
2. For Color/PDI mode, the ROI box displays on the image. Adjust the position and size of the ROI box.
   - Press the **[Set]** button to toggle the ROI box between solid line and dotted line status.
   - When the ROI box is solid line, roll the trackball to adjust the position of the ROI box.
   - When the ROI box is dotted line, roll the trackball to adjust the size of the ROI box.
3. Tap **[Start Acquisition]** on the touch screen or press the **[Update]** button on the control panel to activate the acquisition state.
   - The image area displays the real-time acquired image in full screen.
4. Slowly and smoothly move the probe along the scanning section to acquire

image. When collecting images, please pay attention to the color of the ROI box and adjust the moving speed properly.

- Green: appropriate speed.
- Blue: too slow.
- Red: too fast.

5. Tap **[End Acquisition]** on the touch screen to end the acquisition, and the spliced image displayed in the image area.
6. Optimize the image. (Refer to "6.10.2 Image Optimization (Pano)" for details)

   The parameter area on the right side of the screen provides real-time parameter information of the panoramic mode. The meanings of each parameter are as follows:

Parameter	Pano-Mode
F	Working Frequency (MHz)
D	Depth (mm)
G	Gain
DR	Dynamic Range
Z	Zoom

7. View and manage images.
   - Zooming: Rotate the **[Zoom]** knob on the control panel to zoom in/out the image globally.
   - Rotation: Rotate the **[Angle/Steer]** knob on the control panel to rotate the panorama image.
   - Review Cine: Tap **[Review Cine]** on the touch screen to enter cine review mode. In cine review mode, a blue frame marker shows the sequence of the images currently being reviewed in the panoramic image on the right side of the screen.
   - ReCapture: Press the **[Freeze]** or **[Update]** button on the control panel or tap **[ReCapture]** on the touch screen to return to the capturing mode.
   - Perform measuring or add body marks or annotations as desired.
8. Press the **[B]** knob on the control panel to exit the panoramic imaging mode and return to B-mode.

6.10.2 Image Optimization (Pano)

6.10.2.1 Chroma

Replace grayscale distinction with color distinction to intuitively show grayscale level of the images.

Operation:

Rotate the knob under **[Chroma]** to change the color.

6.10.2.2 Size

Adjust the displayed image size.

Operation:

Press the knob under **[Size]** to select image size.

- **[Fix]**: Automatically adjusts the image size to fit the image area (default setting).
- **[Actual]**: Displays the image at its actual size without any scaling.

6.10.2.3 Ruler

Display/hide the ruler at the edges of the image.

Operation:

Tap **[Ruler]** on the touch screen to display/hide the ruler.

6.10.3 Image Quality

Panoramic images shall be combined with other clinical methods in diagnosis. Before using or measuring an image, make sure that the acquired image is clear and reliable.

Reacquire the image in the case of any one of the following situations happens:

- The image capture source is not a single plane.
- There is large black area in the image.
- Non continuous image.
- There are shadows in the image.
- Non continuous skin line.
- Unclear anatomical contour.

6.11 Elastography

Elastography indicates the elastic property distribution of the tissue by manual pressure or human breathing, and quantitatively displays the relative hardness of the tissue, thereby judging the hardness of the mass.

NOTE: Elastography is available only for linear and convex probes.

6.11.1 Basic Procedure of Elastography

Perform the following steps:

1. In B-mode, tap **[Elasto]** on the touch screen or press the user-defined “Elasto” button to enter the Elastography mode. (For details of customizing a user-defined button, see “4.2.5 Customize”.)
    - The image area displays two real-time images on the left and right; the left is elastography image with ROI box while the right is the real-time B image. The pressure curve is displayed in real time at the bottom of the screen.

- X-axis indicates time and Y-axis indicates pressure level.

2. Adjust the position and size of the ROI box.
   - Press the **[Set]** button to toggle the ROI box between solid line and dotted line status.
   - When the ROI box is solid line, roll the trackball to adjust the position of the ROI box.
   - When the ROI box is dotted line, roll the trackball to adjust the size of the ROI box.
3. Optimize the image. (Refer to "6.11.2 Image Optimization (Elastography)" for details)

   The parameter area on the right side of the screen provides real-time parameter information of Elastography mode. The meanings of each parameter are as follows:

Parameter	Description
MAP	Map
OP	Opacity

4. View and manage images.
5. Press the **[B]** knob on the control panel to exit the Elastography imaging mode and return to B mode.

6.11.2 Image Optimization (Elastography)

6.11.2.1 Persistence

Superimpose and average the images of adjacent frames to remove the noise and enhance the details.

Operation:

Rotate the knob under **[Persistence]** to adjust the persistence level.

6.11.2.2 Smooth

Suppress noise and smooth the image.

Operation:

Rotate the knob under **[Smooth]** to adjust the smooth level.

6.11.2.3 Opacity

Adjust the opacity of the image.

Operation:

Rotate the knob under **[Opacity]** to change the opacity of the image.

6.11.2.4 Map

Display different color maps and toggle the map between color and gray for better

observation.

Operation:

Rotate the knob under **[Map]** to choose the map.

6.11.2.5 Invert

Flip the map.

Operation:

Tap **[Invert]** on the touch screen to turn on/off the invert function.

6.11.2.6 Synchronization

Switch the display between dual image (B+Elasto) and B-mode image.

Operation:

- Tap **[Sync]** on the touch screen to enable/disable synchronized display of live B-mode images and Elasto image function.
- When enabled, two image windows are displayed in the image area, with the 2D+Elasto image on the left side and the 2D image on the right side; when disabled, only the 2D+Elasto image window is displayed.

Chapter 7 Image Review and Management

After the image acquisition is complete, you can view and compare the image by splitting display, image zooming, cine replay, etc., or you can perform other operations on the image, such as adding comments and body marks to the image.

7.1 Splitting Display

Dual-split display or Quad-split is used for ultrasound images comparison at different times.

7.1.1 Dual-Split Display

1. In B-mode, press **[Dual]** button on the control panel to enter the dual-split mode. The image on the left displays the real-time B-image.
2. Press **[Dual]** button again, the image on the left will be frozen while the image on the right displays the real-time B image.

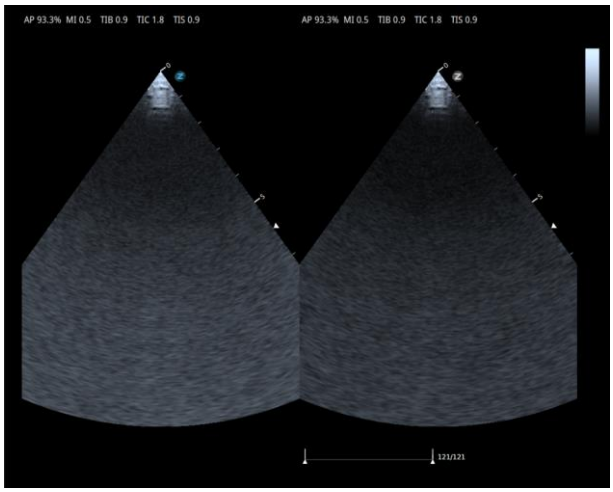

Figure 39 Dual-Split Display

3. Press the **[Dual]** button on the control panel to switch the real-time/frozen status of the left and right images.
4. Press the **[B]** knob on the control panel to exit dual-split display.

7.1.2 Quad-Split Display

1. Tap **[Quad]** on the touch screen to enter the Quad-Split display status which divides the image area into four equal areas.

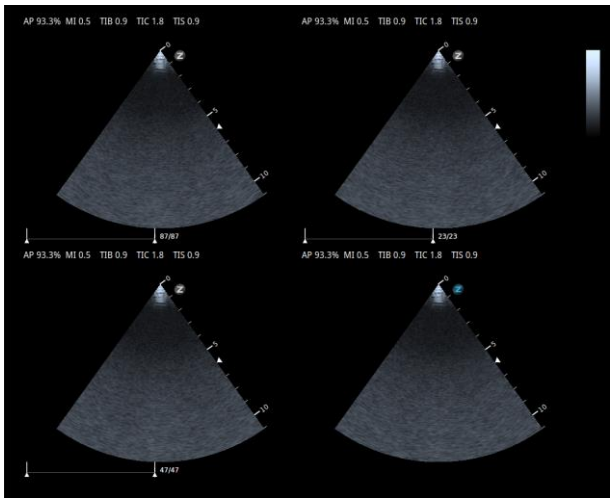

Figure 40 Quad-Split Display

2. Tap **[Quad]** again to freeze the current image and make the next image into real-time status.
3. Press the **[B]** knob on the control panel to exit Quad-Split display.

7.2 Image Magnification

Magnify the image to show more details.

NOTE:
- **Image zooming changes the frame rate which tends to change the thermal index and position of the focus area and possibly results in different positions of the peak intensity in the acoustic field. As a result, the MI may change.**
- **Adjust the position of the scale or focus as needed.**

7.2.1 Global Zoom

1. Rotate the **[Zoom]** knob on the control panel to zoom the ultrasonic image.
2. Press the **[Zoom]** knob to exit global zooming.

7.2.2 Local Zoom

NOTE: Local zooming is only applicable to real-time images.

1. Press the **[Zoom]** knob on the control panel to activate local zoom function and display the ROI box.
2. Roll the trackball to adjust the position and size of ROI, press the **[Set]** button.
   - Press the **[Set]** button to toggle the ROI box between solid line and dotted line status.
   - When the ROI box is solid line, roll the trackball to adjust the position of the ROI box.
   - When the ROI box is dotted line, roll the trackball to adjust the size of the ROI box.
3. Rotate the **[Zoom]** knob on the control panel to zoom the ROI image.

4. Press the **[Zoom]** knob again to exit local zooming.

7.2.3 Full Screen

1. Press the **<FZoom>** key to display the ultrasound image, image parameters, and information area full screen.
2. Press the **<FZoom>** key again to display the ultrasound image and image parameters full screen.
3. Press the **<FZoom>** key again to exit the full screen and back to the normal state.
   - Use the **<FZoom>** key to switch between three display states in sequence.

7.3 Freeze the Image

You can freeze the image for next operation during the scanning at any time.

1. Press the **[Freeze]** on the control panel to freeze the image. Image zooming, measurement, annotation and optimization of some imaging parameters can be performed in the frozen state.
2. After freezing an image, the system may enter cine replay, caliper measurement or application measurement which depends on user's preset. For details, refer to "4.2.3 Image".
3. Press the **[Freeze]** again on the control panel to unfreeze the image.

NOTE: In Dual-Split display or Quad-Split display mode, only image of the currently activated window can be unfrozen, the other images remain frozen.

7.4 Cine Replay

In the real-time state, press the **[Freeze]** button on the control panel to freeze the current image and enter the cine replay by default, and the cine progress bar is displayed on the screen. You can review the cine repeatedly by automatic replay, or you can review the cine manually by rolling the trackball frame by frame. Tap **[Cine]** on the touchscreen to enter the cine replay settings.

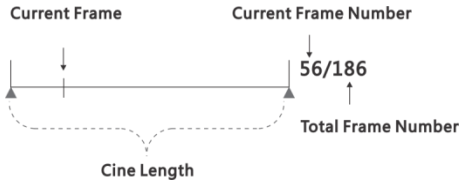

Figure 41 Cine Progress Bar (2D)

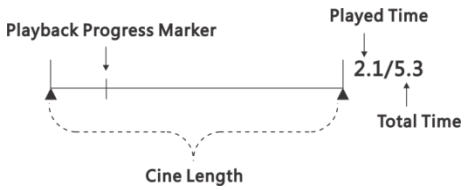

Figure 42 Cine Progress Bar (M/PW/CW/TVD)

Table 31 Cine Replay Operation

Item	Description
Save	Click to save cine region.
Reset	Click to reset the first frame and last frame.
Jump to First	Jump to the first frame.
Jump to Last	Jump to the last frame.
Start Frame	Set the start frame.
End Frame	Set the end frame.
Start Time	Set the start time.
End Time	Set the end time.
Replay Speed	Set the replay speed.
Add to Report	Add the current frame to the current report.

NOTE: System defaults to replay cine manually.

7.4.1 Cine Replay Region

To set the cine replay region, please perform the following steps:

- **2D Mode:**
  1. Rotate the knob under the **[Start Frame]** or roll the trackball to desired frame and then press left set button to set the start point of the cine replay region.
  2. Rotate the knob under the **[End Frame]** or roll the trackball to desired frame and then press right set button to set the end point of the cine replay region.
- **M/PW/CW/TVD Mode:**
  1. Rotate the knob under the **[Start Time]** or roll the trackball to desired frame and then press left set button to set the start time of the cine replay region.
  2. Rotate the knob under the **[End Time]** or roll the trackball to desired frame and then press right set button to set the end time of the cine replay region.

NOTE:
- **The system plays the cine replay region automatically after replay region setting.**
- **Press the [Save 2] button on the control panel to save the cine replay region to the clipboard.**

7.4.2 Manual Replay

After entering the cine replay, roll the trackball to replay the cine frame by frame. The progress bar shows the position of the current frame.

Manual replay can be performed in the replay region.

7.4.3 Auto Replay

- **Enable Auto Replay**
  - In the manual replay status, press the knob under the **[Replay Speed]** to enable auto replay, or rotate the knob under the **[Replay Speed]** to adjust the replay speed to enable the auto replay.
- **Disable Auto Replay**
  - In the auto replay status, press the knob under the **[Replay Speed]** to disable auto replay, or rotate the knob under the **[Replay Speed]** to **[Off]** to disable auto replay and switch to the manual replay.
  - In the auto replay status, roll the trackball to disable auto replay and switch to the manual replay.

NOTE: The system plays the cine replay region automatically after replay region has been set.

7.5 Annotation

The annotation function allows users to add comments, traces, arrows, and body mark to ultrasound images in both frozen and real-time status.

NOTE: Users can preset annotation via [System Preset] → [Application]. Refer to "4.2.4 Application" for details.

7.5.1 Comment

Users can enter text content directly or add comment item to images.

7.5.1.1 Add Comment

To add a comment, please perform the following steps:

1. Press the **[ABC]** button on the control panel or the **<Text>** key on the keyboard in any modes to activate comment function.
2. Select comment language, comment library and comment size.
   - Rotate the knob under **[English]** to switch text language between Chinese and English.
   - Rotate the knob under **[Exam]** to preset comment item library.
   - Rotate the knob under **[Font Size]** to set text size.
3. Click comment item you want to add, roll the trackball to move the comment

item to the desired position, press the **[Set]** button.

4. If there is no applicable comment item, roll the trackball to move the comment item to the desired position and enter the comment through keyboard, and press the **[Set]** button. Or you can add a new comment iterm by customizing comment. (Refer to "7.5.1.2 Customize Comment" for details)
5. To add more comments, repeat Step 3 and 4.
6. Press **[ABC]** button on the control panel or press **<Fn> + <Text>** key on the keyboard to exit comment function.

7.5.1.2 Customize Comment

1. Tap **[Custom]** on the touch screen to enter the custom comment interface.
2. Add comments, delete comments, or adjust the position of comments as needed.
   - Add a comment: Enter the comment in the custom text box and click **[Add]**.
   - Delete a comment: Select a comment to be deleted and click **[Delete]**.
   - Adjust the position of comments: Click on two comments in sequence to swap their positions.
3. Click **[OK]** to save the settings and exit the custom comment interface.

7.5.1.3 Edit Comment

1. Move the cursor over the comment item to activate the item. Activated comment item or text is highlight in green.
2. Move the cursor to the character to be modified by arrow keys of the keyboard.
3. Press **<Back>** to delete undesirable characters and enter new comments directly. After the modification, move the cursor away from the text comment to complete the modification.

7.5.1.4 Move Comment

1. Move the cursor to the text comment to be moved, press the **[Set]** button, the text comment is highlighted with green box.
2. Roll the trackball to move the text comment to the desired position, press the **[Set]** button.

7.5.1.5 Change Font Size

Rotate the knob under the **[Font Size]** to change the font size. Or you can change the font size through Preset screen (press**<Setup>**). Refer to “4.2.4 Application” for details.

7.5.1.6 Hide/Display Comment

Tap **[Hide]** / **[Display]** on the touch screen to hide or display comments.

7.5.1.7 Delete Comment

- **Delete Selected Comment**
  1. In annotation screen, move the cursor over the comment to be deleted, press the **[Set]** button.
  2. Press the **[Clear]** button on the control panel to delete the selected comment.
- **Delete Recently added Comments**

  In annotation screen, press the **[Clear]** button on the control panel to delete recently added comments in reverse order.
- **Delete All Comments**

  Long press the **[Clear]** button on the keyboard to delete all comments.

7.5.2 Trace

7.5.2.1 Add Trace

To add a trace, please perform the following steps:

1. Press the **<Text>** key on the keyboard in any modes to activate text annotation function.
2. Tap **[Trace]** on the touchscreen to enable the trace annotation function.
3. Position the cursor at the start point of the target area and press the **[Set]** button.
4. Use the trackball to trace as needed, then press **[Set]** again to finish tracing.
   - The trace curve changes color from green to yellow once tracing is complete.
   - You can reverse the trackball's operation to retrace the path until confirmed.
5. Press the **<Fn> + <Text>** keys on the keyboard to exit the text annotation function.

7.5.2.2 Delete Trace

- **Delete Recently Added Trace**

  Press the **[Clear]** button on the control panel to delete recently added trace in reverse order.
- **Delete All Traces**

  Long press the **[Clear]** button on the keyboard to delete all traces.

7.5.3 Arrow

7.5.3.1 Add Arrow

To add an arrow, please perform the following steps:

1. Press the **<Arrow>** key on the keyboard in any modes to activate arrow function.

2. Rotate the knob under **[Arrow Size]** to change the arrow size.
3. Rotate the **[Angle/Steer]** knob on the control panel to adjust the direction of the arrow.
4. To add more arrows, repeat step 2~4.
5. Move the cursor to the desired position, press the **[Set]** button.
6. Press the **<Arrow>** key on the keyboard again to exit arrow function.

7.5.3.2 Hide/Display Arrow

Tap **[Hide]** / **[Display]** on the touch screen to hide or display arrows.

7.5.3.3 Delete Arrow

- In annotation screen, press the **[Clear]** button on the control panel to delete the recently-added arrow in reverse order.
- Long press the **[Clear]** button on the control panel to delete all arrow marks.

7.5.4 Body Mark

7.5.4.1 Add Body Mark

To add a body mark, please perform the following steps:

1. Press the **<Body Mark>** key on the keyboard or the **[Body Mark]** button on the control panel in any modes to activate body mark function.
2. Rotate the knob under **[Exam]** to select body mark library.
3. Click the body mark you want to add.

NOTE: Click a new body mark on the touch screen / menu area to replace the current body mark.

4. Rotate the **[Angle/Steer]** knob on the control panel to adjust the direction of the probe mark.
    - In the cardiac exam mode, rotate the knob under **[ProbeMark]** to turn on/off the probe marker.
5. Press the **<Body mark>** on the keyboard again in any modes to exit body mark function.

7.5.4.2 Move Body Mark

1. Press the **[Cursor]** button on the control panel to display the cursor.
2. Move the cursor over the body mark to be moved, press the **[Set]** button. The cursor is displayed as a hand-shaped cursor.
3. Move the trackball to the desired position and press the **[Set]** button to place the body mark.

7.5.4.3 Customize Body Mark

1. Tap **[Custom]** on the touch screen to access the screen for customizing body marks.
2. Click the **[Drive]** drop-down box and select the storage medium: local disk or removable USB disk.
3. Double-click on a folder where pictures of body marks are stored under the selected disk to enter its path.
4. Click the **[Type]** drop-down box and select the picture type.
   - Picture type: png
   - Recommended picture size: 160 × 160 pixels
5. Click a picture to select it. The picture name is displayed in the **[File]** text box.
6. Click **[OK]** to save the settings and exit the screen for customizing body marks.
   - To delete a customized body mark, rotate the knob under **[Delete]** to access the delete screen. Select the target body mark and click **[Delete]** to delete it.

7.5.4.4 Delete Body Mark

In annotation screen, press the **[Clear]** button on the control panel to delete the body mark.

Chapter 8 Image Measurement

Measurement includes general measurement and application measurement. The system supports measurement in real-time, freeze, Dual-Split display, Quad-Split display, zooming and cine replay status.

Warning

- **Before making a measurement of the target area, make sure that the target area and image to be measured are correct and qualified to avoid misdiagnosis.**
- **Before performing Doppler color flow image measurement, do not let the probe emit direction perpendicular to the direction of blood flow, otherwise incorrect blood flow information may be displayed.**

NOTE: **During the measurement, if the system has been powered off or the [EndExam] button on the control panel has been pressed, all unsaved data will be lost.**

8.1 Basic Operating Procedure

To perform a measurement, please perform the following steps:

1. In the real-time or frozen status, press the **[Caliper]** or **[Measure]** button on the control panel to activate the general / application measurement function.
   - The menu area displays the general measurement menu/application measurement menu of the current exam mode, and the touch screen also displays the corresponding measurement menu.
2. Select a measurement item.
   - Tap the measurement item on the touch screen or roll the trackball to select the measurement item and press the **[Set]** button.
3. Perform a measurement:
   - Move the cursor to the target area, press the **[Set]** button to activate measurement item. At the same time, the result window displays with measurement results and calculation data.
4. Adjust the position of result window (if needed).
   - After measurement, place the cursor on the title bar of the result window to change the cursor into a hand cursor. Press the **[Set]** button, and roll the trackball to move the result window.
5. After the measurement is completed, press the **[Caliper]** or **[Measure]** button on the control panel to exit the general / application measurement function.

8.2 General Measurement

8.2.1 2D General Measurement

2D mode general measurement is applicable for general measurement of 2D mode such as B-mode, Color mode, PDI mode, panoramic mode, and elastography.

8.2.1.1 Distance (2D)

Measure the distance between two points.

Perform the following steps:

1. Press the **[Caliper]** button on the control panel to start measurement.
2. Click **[Distance]** in the measurement menu, and the cursor appears.
3. Move the cursor to the start point and press the **[Set]** button.
4. Move the cursor to the end point and press the **[Set]** button.
5. Results are displayed in the result window.

8.2.1.2 Area & Circumference

Measure the area and circumference of an enclosed area. Available measurement methods include Trace, Ellipse, Cross and Spline.

- **Trace**

Perform the following steps:

1. Press the **[Caliper]** button on the control panel to start measurement.
2. Click **[Trace]** in the measurement menu, and the cursor appears.
3. Move the cursor to the start point of the target area and press the **[Set]** button.
4. Roll the trackball to trace the outline of the target and press the **[Set]** button to fix the end point of the trace line.
5. Results are displayed in the result window.

- **Ellipse**

Perform the following steps:

1. Press the **[Caliper]** button on the control panel to start measurement.
2. Click **[Ellipse]** in the measurement menu, and the cursor appears.
3. Move the cursor to set the start point of the first axis of the ellipse and press the **[Set]** button.
4. Move the cursor to set the end point of the first axis of the ellipse and press the **[Set]** button.
5. Roll the trackball to size the measured axis as needed and press the **[Set]** button.
6. Results are displayed in the result window.

- **Cross**

Perform the following steps:

1. Press the **[Caliper]** button on the control panel to start measurement.
2. Click **[Cross]** in the measurement menu, and the cursor appears.
3. Move the cursor to the start point of the target area and press the **[Set]** button.
4. Move the cursor to the end position of the fixed axis and press the **[Set]** button. An irregular circle appears on the screen.
5. Roll the trackball to set the start point of the second axis of the circle and press the **[Set]** button.
6. Roll the trackball to set the end point of the second axis of the circle and press the **[Set]** button.
7. Results are displayed in the result window.

- **Spline**

Perform the following steps:

1. Press the **[Caliper]** button on the control panel to start measurement.
2. Click **[Spline]** in the measurement menu, and the cursor appears.
3. Move the cursor to the start point of the target area and press the **[Set]** button.
4. Move the cursor along the target area to fix the second point and press the **[Set]** button.
5. Repeat step 4. A maximum of 12 points can be fixed.
6. Press the **[Set]** button twice to complete the measurement.
7. Results are displayed in the result window.

8.2.1.3 Angle

Measure the angle between two intersecting lines.

Perform the following steps:

1. Press the **[Caliper]** button on the control panel to start measurement.
2. Click **[Angle]** in the measurement menu, and the cursor appears.
3. Set two line segments as described in “8.2.1.1 Distance (2D)”.
4. The system automatically calculates the angle between the two line segments.
5. Results are displayed in the result window.

8.2.1.4 Volume

Measure the volume of the target object. Available measurement methods include 3 Dist, Ellipse and Ellipse Dist.

- **3 Dist**

To obtain the volume by measuring the vertical section area of the target object.

Perform the following steps:

1. Press the **[Caliper]** button on the control panel to start measurement.
2. Click **[Volume]** in the measurement menu, and the cursor appears.
3. Measure the length (D_1), width (D_2), and height (D_3) of the target object.
4. The system automatically calculates the volume. The length, width, height, and volume of the target object are displayed in the result window.
    - Formula: $Volume(cm^3) = \pi/6 \times D_1(cm) \times D_2(cm) \times D_3(cm)$
    - D_1, D_2, and D_3 correspond to the length, width, and height of the target object.

➢ **Volume (Ellipse)**

Perform the following steps:

1. Press the **[Caliper]** button on the control panel to start measurement.
2. Click **[Volume (Ellipse)]** in the measurement menu, and the cursor appears.
3. Move the cursor to set the start point of the first axis of the ellipse and press the **[Set]** button.
4. Roll the trackball to set the end point of the first axis of the circle and press the **[Set]** button.
5. Move the cursor to adjust the second axis of the ellipse, and press the **[Set]** button to complete the volume ellipse measurement.
6. The system automatically calculates the volume. Results are displayed in the result window.
    - Formula: $Volume(cm^3) = \pi/6 \times a(cm) \times b^2(cm)$
    - Where, “a” corresponds to the first axis of the ellipse, and “b” corresponds to the second axis of the ellipse.

➢ **Volume (E+Dist)**

Perform the following steps:

1. Press the **[Caliper]** button on the control panel to start measurement.
2. Click **[Volume (E+Dist)]** in the measurement menu, and the cursor appears.
3. Measure the area of the vertical section as described in “8.2.1.2 Area & Circumference”.
4. Move the cursor to set the start point of the third axis and press the **[Set]** button.
5. Move the cursor to set the end point of the third axis and press the **[Set]** button.
6. The system automatically calculates the volume. The area, length, and volume of the target object are displayed in the result window.
    - Formula: $Volume(cm^3) = \pi/6 \times a(cm) \times b(cm) \times m(cm)$
    - Where, “a” corresponds to the long axis of the ellipse, and “b” corresponds to the short axis of the ellipse, “m” corresponds to the third axis of the ellipse.

8.2.1.5 Double Dist

Measure the distance between two mutually perpendicular lines.

Perform the following steps:

1. Press the **[Caliper]** button on the control panel to start measurement.
2. Click **[Double Dist]** in the measurement menu, and the cursor appears.
3. Move the cursor to set the start point of the first line segment and press the **[Set]** button.
4. Move the cursor to the end point of the line segment and press the **[Set]** button. A line perpendicular to the line segment is displayed on the screen.
5. Move the trackball to adjust the start point of the vertical line segment and press the **[Set]** button.
6. Move the trackball to adjust the end point of the vertical line segment and press the **[Set]** button.
7. Results are displayed in the result window.

8.2.1.6 Curve Length

Measure the length of a curve. Available measurement methods include Trace and Spline.

- **Trace Len**

Perform the following steps:

1. Press the **[Caliper]** button on the control panel to start measurement.
2. Click **[Trace Len]** in the measurement menu, and the cursor appears.
3. Move the cursor to the start point of the trace line and press the **[Set]** button.
4. Roll the trackball to trace the outline of the target and press the **[Set]** button to fix the end point of the trace line.
5. Results are displayed in the result window.

- **Trace Len (Spline)**

Perform the following steps:

1. Press the **[Caliper]** button on the control panel to start measurement.
2. Click **[Trace Len (Spline)]** in the measurement menu, and the cursor appears.
3. Move the cursor to the start point of the target area and press the **[Set]** button.
4. Move the cursor along the target area to fix the second point and press the **[Set]** button.
5. Repeat step 4. A maximum of 12 points can be fixed.
6. Press the **[Set]** button twice to set the end point of the spline.
7. Results are displayed in the result window.

8.2.1.7 Parallel

Measure the distance between five parallel lines on the ultrasound image.

Perform the following steps:

1. Press the **[Caliper]** button on the control panel to start measurement.
2. Click **[Parallel]** in the measurement menu, and the cursor and two lines perpendicular to each other appear.
3. Move the cursor to set the start point of the first parallel and press the **[Set]** button.
4. Move the cursor along the vertical line and press the **[Set]** button to set the second parallel.
5. Repeat step 4 to set the third, fourth, fifth parallel as needed.
6. Results are displayed in the result window.

8.2.1.8 B Hist

Measure and calculate the gray scale distribution of the ultrasonic echo signals in an enclosed region.

Available measurement methods include B Hist (Ellipse), B Hist (Trace), B Hist (Spline) and B Hist (Rectangle).

Perform the following steps:

1. Press the **[Caliper]** button on the control panel to start measurement.
2. Click **[B-Hist (Ellipse)]**, **[B-Hist (Trace)]**, **[B-Hist (Spline)]** or **[B-Hist (Rectangle)]** in the measurement menu, and the cursor appears.
3. Set up an enclosed area with the area measurement method as described in “8.2.1.2 Area & Circumference”.
4. The system automatically calculates the gray distribution of the ultrasonic echo signal in this area and displays it at the top of the screen.

8.2.1.9 B Profile

Measure and calculate the gray distribution of the ultrasonic echo signals across a line.

Perform the following steps:

1. Press the **[Caliper]** button on the control panel to start measurement.
2. Click **[B Profile]** in the measurement menu, and the cursor appears.
3. Set a line with the distance measurement method as described in “8.2.1.1 Distance (2D)”.
4. The system automatically calculates the gray distribution of the ultrasonic echo signal on the line and displays it at the top of the screen.

8.2.1.10 Depth

Measure the distance from the center of sector to the cursor (for surface probe) or the

distance from probe surface to the cursor in the direction of ultrasonic beam (for linear and convex array probe).

Perform the following steps:

1. Press the **[Caliper]** button on the control panel to start measurement.
2. Click **[Depth]** in the measurement menu, and the cursor appears.
3. Move the cursor to the desired position and press the **[Set]** button.
4. Results are displayed in the result window.

8.2.1.11 Color Vel

Measure the color flow velocity in Color mode.

Perform the following steps:

1. Press the **[Caliper]** button on the control panel to start measurement.
2. Click **[Color Vel]** in the measurement menu, and the cursor appears.
3. Move the cursor to the desired point for blood flow velocity measurement and press the **[Set]** button.
4. Rotate the **[Angle/Steer]** knob to align the floating line to make it consistent with the direction of blood flow.
5. Results are displayed in the result window.

8.2.1.12 Ratio (D)

Measure the lengths of any two lines and calculate their ratio.

Perform the following steps:

1. Press the **[Caliper]** button on the control panel to start measurement.
2. Click **[Ratio (D)]** in the measurement menu, and the cursor appears.
3. Set two line segments as described in “8.2.1.1 Distance (2D)”.
4. The system automatically calculates the ratio, and the results are displayed in the result window.

8.2.1.13 Ratio (Area)

Measure the areas of any two enclosed areas and calculate their ratio.

Perform the following steps:

1. Press the **[Caliper]** button on the control panel to start measurement.
2. Click **[Ratio (Trace)]**, **[Ratio (Ellipse)]**, **[Ratio (Spline)]** or **[Ratio (Cross)]** in the measurement menu, and the cursor appears.
3. Use the area measurement method (choose one of trace, ellipse, spline, cross) to set two closed areas.
4. The system automatically calculates the ratio, and the results are displayed in the result window.

8.2.1.14 Strain Ratio

Measure the strain ratio in the image.

NOTE: Only Elastography imaging supports this function.

Perform the following steps:

1. In the Elastography imaging mode, press the **[Caliper]** button on the control panel to start measurement.
2. Click **[Strain Ratio]** in the measurement menu, and the cursor appears.
3. Perform the measurement as described in “8.2.1.13 Ratio (Area)”
4. After the measurement is complete, the measurement result will be displayed in the result window.

8.2.1.15 IMT

Measure the intima-media thickness of the carotid artery. Refer to “8.3.5.3 Vascular Study and Calculation” for details.

8.2.1.16 Volume Flow

Measure the blood flow through a blood cross section per unit time. Refer to “8.2.3.7 Vol Flow” for details.

8.2.2 M General Measurement

M mode general measurement is applicable for general measurement of M images and anatomical M images.

8.2.2.1 HR (M)

Measure the time of N (N≤8) cardiac cycles and calculate the heart rate in M-mode imaging.

Perform the following steps:

1. Set the cardiac cycle.
   - Enter the Preset screen, select **[Preset]** → **[System Preset]** → **[Application]**
   - Select the number of cardiac cycles from the **[Cardiac Cycle]** drop-down list.
   - Click **[Save]** to save current setting and return to the Home screen.
2. In M-mode, press the **[Caliper]** button on the control panel to start measurement.
3. Click **[HR (M)]** in the measurement menu, and the cursor appears.
4. Move the cursor to the start point and press the **[Set]** button.
5. Move the cursor to set the end point in horizontal direction and press the **[Set]** button.
6. Results are displayed in the result window.

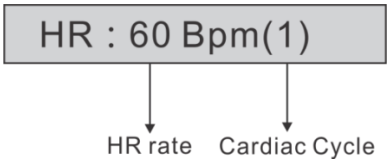

Figure 43 HR Result

NOTE: During the HR measurement, the number of cardiac cycles between the start and end points must be consistent with the preset. Otherwise, misdiagnosis may occur.

8.2.2.2 Distance (M)

Measure the distance between two points on the sampling line at a certain time.

Perform the following steps:

1. In M-mode, press the **[Caliper]** button on the control panel to start measurement.
2. Click **[Distance (M)]** in the measurement menu, and the cursor appears.
3. Move the cursor to the start point and press the **[Set]** button.
4. Move the cursor to the end point and press the **[Set]** button.
5. Results are displayed in the result window.

8.2.2.3 Time (M)

Measure the time interval between two points.

Perform the following steps:

1. In M-mode, press the **[Caliper]** button on the control panel to start measurement.
2. Click **[Time (M)]** in the measurement menu, and the cursor appears.
3. Move the cursor to the start point and press the **[Set]** button.
4. Move the cursor to set the end point in horizontal direction and press the **[Set]** button.
5. Results are displayed in the result window.

8.2.2.4 Slope

Measure the depth and time between two points and calculate the slope.

Perform the following steps:

1. In M-mode, press the **[Caliper]** button on the control panel to start measurement.
2. Click **[Slope]** in the measurement menu, and the cursor appears.
3. Move the cursor to set the first point and press the **[Set]** button.
4. Move the cursor to set the second point and press the **[Set]** button.
5. Results are displayed in the result window.

8.2.2.5 Velocity

Calculate the average velocity by measuring the distance and time between two points.

1. In M-mode, press the **[Caliper]** button on the control panel to start measurement.
2. Click **[Velocity]** in the measurement menu, and the cursor appears.
3. Move the cursor to the desired position and press the **[Set]** button.
4. Results are displayed in the result window.

8.2.3 Doppler General Measurement

Doppler general measurement is applicable for general measurement of PW/CW images.

8.2.3.1 Vel

Measure the velocity, pressure gradient and spectrum correction angle of a point on the Doppler spectrum waveform.

Perform the following steps:

1. In PW/CW mode, press the **[Caliper]** button on the control panel to start measurement.
2. Click **[Vel]** in the measurement menu, and the cursor appears.
3. Move the cursor, the real time velocity of the position is displayed in the result window. Move the cursor to the desired position and press the **[Set]** button.
4. Results are displayed in the result window.

8.2.3.2 Ratio (Vel)

Measure two D velocity and calculate their ratio for blood analysis.

Perform the following steps

1. In PW/CW mode, press the **[Caliper]** button on the control panel to start measurement.
2. Click **[Ratio (Vel)]** in the measurement menu, and the cursor appears.
3. Move the cursor to fix the two points for velocity measurement and press the **[Set]** button.
4. Move the cursor, the real time velocity of the position is displayed in the result window.
5. The velocity ratio of the two points is displayed in the result window.
   - Formula: $Vel\ Ratio\ (No\ unit)\ = | Vel\ 1(cm/s)/Vel\ 2\ (cm/s) |$

8.2.3.3 Time (Doppler)

Measure the time interval between two points.

Perform the following steps:

1. In PW/CW mode, press the **[Caliper]** button on the control panel to start measurement.
2. Click **[Time (Doppler)]** in the measurement menu, and the cursor appears.
3. Move the cursor to the start point and press the **[Set]** button.
4. Move the cursor to set the end point in horizontal direction and press the **[Set]** button.
5. Results are displayed in the result window.

8.2.3.4 HR (Doppler)

Measure the time of N (N≤8) cardiac cycles and calculate the heart rate in Doppler mode image. The measurement procedure is the same as that of HR (M). Refer to “8.2.2.1HR (M)” for details.

8.2.3.5 D Trace

Trace one or several Doppler waveforms on the PW mode image to obtain speed and pressure gradient.

The Doppler spectrum diagram is shown below:

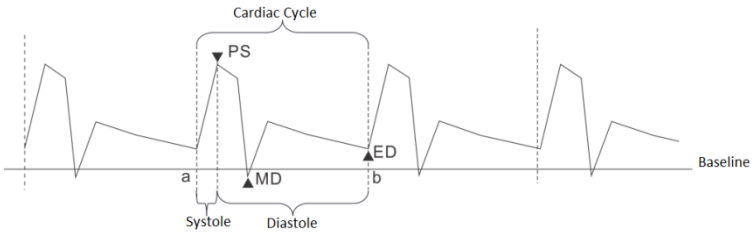

Figure 44 Doppler Spectrum

Perform the following steps:

1. In PW/CW mode, press the **[Caliper]** button on the control panel to start measurement.
2. Click **[D Trace]** in the measurement menu, and the cursor appears.
3. Move the cursor to the start point and press the **[Set]** button.
4. Roll the trackball to draw a trace line along the spectrum Doppler waveform to the end position, and press the **[Set]** button to complete the trace. The measurement result is displayed in the result window.

   The parameters displayed in the result window are described as follows:

Parameter	Description	
PS	Peak Systolic Velocity	The maximum velocity of red blood cells passing through the sampling volume
ED	End-diastolic velocity	The blood flow velocity at the end of the cardiac cycle

Parameter	Description	
MD	Min-diastolic velocity	The minimum velocity of the cardiac cycle
Vel	/	Blood flow velocity
Average velocity	/	$TAMAX(cm/s) = \int_{T_a}^{T_b} V(t)dt/(T_b - T_a)$ Where V is the maximum velocity $TAMEAN(cm/s) = \int_{T_a}^{T_b} V(t)dt/(T_b - T_a)$ Where V is the average velocity
PPG	Peak Pressure Gradient	$PPG(mmHg) = 4 \times (PS(m/s))^2$
Average Pressure Gradient	Average Pressure Gradient	$MPG(mmHg) = \int_{T_a}^{T_b} 4\big(V(t)\big)^2 dt/(T_b - T_a)$ Where V is the peak systolic velocity $MMPG(mmHg) = \int_{T_a}^{T_b} 4\big(V(t)\big)^2 dt/(T_b - T_a)$ Where V is the average systolic velocity
VTI	Velocity-Time Integral	$VTI(m) = \int_{T_a}^{T_b} V(t)dt$
AT	Acceleration Time	Acceleration time from end-diastolic velocity to peak systolic velocity
DT	Deceleration Time	Deceleration time
HR	Heart rate	Beats per minute in a cardiac cycle
S/D	/	$S/D = PS(m/s)\ /ED(m/s)$
D/S	/	$D/S\ =\ ED(m/s)\ /PS(m/s)$
PI	Pulsatility Index	$PI\ =\ \|(\ PS(m/s) - ED(m/s))\ /TAMAX(m/s)\ \|$
RI	Resistive Index	$RI\ =\ \|(\ PS(m/s) - ED(m/s))\ /PS(m/s)\ \|$
θ	/	Correction Angle
PV	Peak Velocity	The maximum velocity of red blood cells passing through the sampling volume and it also applicable to venous vessels

8.2.3.6 PS/ED

Measure the velocity of peak systolic point (PS) and end diastolic (ED) on the Doppler spectrum.

1. In PW/CW mode, press the **[Caliper]** button on the control panel to start

measurement.

2. Click **[PS/ED]** in the measurement menu, and the cursor appears.
3. Move the cursor to the peak systolic velocity on the Doppler spectrum and press the **[Set]** button.
4. Move the cursor to the end diastolic velocity on the Doppler spectrum and press the **[Set]** button.
5. The RI, S/D and correction between the two points are displayed in the result window.

8.2.3.7 Vol Flow

Measure the blood flow through a blood cross section per unit time.

Perform the following steps:

1. In PW/CW mode, press the **[Caliper]** button on the control panel to start measurement.
2. Click **[Vol Flow]** in the measurement menu to display the sub-menu of volume flow: **[Vas Area]**, **[TAMEAN]**, and **[TAMX]**.
3. Click **[Vas Area]** in the measurement menu, rotate the knob under **[Vas Area]** to select measuring method as needed and the cursor appears.
4. Move the cursor to the start point of the target area on B-image and press the **[Set]** button.
5. Move the cursor to the end point of the target area on B-image and press the **[Set]** button.
6. The flow area is displayed in the result window.

NOTE: Steps 4 to 5 can also be performed in B-mode.

7. Click **[TAMEAN]** or **[TAMAX]** in the measurement menu, and the cursor appears.
8. Move the cursor to the start point of the target area on Doppler Spectrum and press the **[Set]** button.
9. Move the cursor to the end point of the target area on Doppler Spectrum and press the **[Set]** button.
10. The system automatically generates trace lines. Results are displayed in the result window.

    The parameters displayed in the result window are described as follows:

Parameter	Description	Formula
Vas Area	Dist	$Vas\ Area = \pi \times (Vas\ Diam\ (cm))^2 / 4$
	Trace	See “8.2.1.2 Area & Circumference”

Parameter	Description	Formula
TAMEAN	Vol Flow(Area)-TAMEAN	$Vol\ Flow(A)\ (ml/min)$ $= \lvert Vas\ TAMEAN\ (cm/s)\rvert \times Vas\ Area\ (cm^2) \times 60\ (s)$ Vas TAMEAN - Time Averaged Mean Velocity, obtained from Vas Trace measurement
TAMAX	Vol Flow(Area)-TAMAX	$Vol\ Flow(A)\ (ml/min)$ $= \lvert Vas\ TAMAX\ (cm/s)\rvert \times Vas\ Area\ (cm^2) \times 60\ (s)$ Vas TAMAX - Time Averaged Maximum Velocity, obtained from Vas Trace measurement

8.2.3.8 Acceleration

Measure the velocity and time interval between two points on the Doppler image to calculate the acceleration, differential pressure, speed difference, and spectrum correction angle.

Perform the following steps:

1. In PW/CW mode, press the **[Caliper]** button on the control panel to start measurement.
2. Click **[Acceleration]** in the measurement menu, and the cursor appears.
3. Move the cursor to the first point and press the **[Set]** button.
4. Move the cursor to the second point and press the **[Set]** button.
5. The acceleration, differential pressure, speed difference, and spectrum correction angle between the two points are displayed in the result window.

8.2.3.9 Ratio (VTI)

Measure two VTI values and calculate their ratio.

Perform the following steps:

1. In PW/CW mode, press the **[Caliper]** button on the control panel to start measurement.
2. Click **[Ratio (VTI)]** in the measurement menu, and the cursor appears.
3. Move the cursor to the start point of VTI1 and press the **[Set]** button.
4. Move the cursor to the end point of VTI1 and press the **[Set]** button.
5. Repeat step 3~4 to fix the VTI2.
6. The VTI1, VTI2, and VTI ratio of the two points are displayed in the result window
   - Formula: $VTI\ Ratio\ (No\ unit)\ = \lvert\ VTI\ 1(cm)/VTI\ 2\ (cm)\ \rvert$

8.3 Application Measurement

Application measurement package includes the following measurement items.

Table 32 Application Measurement Package

Application Measurement	Measurement Item
General	Applicable for general measurements.
Abdomen	Applicable for measurements of animal abdominal organs (liver, spleen, gallbladder, pancreas and kidney) and abdominal large blood vessels.
Reproduction	Applicable for measurement of animal fetus development indicators, GA and EDD estimation.
Cardiology	Applicable for measurement of cardiac and other parameters of animal.
Small Parts	Applicable for measurement of small organs such as thyroid, isthmus, testis and mass.
Vascular	Applicable for measurement of carotid, cerebral, upper and lower extremities vessels, etc.

8.3.1 Abdomen

8.3.1.1 2D Mode

The measurement items, calculation items and measurement method for 2D abdomen measurement are shown in the table below.

Table 33 2D Abdomen Measurement

Items	Description	Methods or Formula
Liver	/	See “8.2.1.1 Distance (2D)”
Liver Mass Vol	Liver Mass Volume	Measure Liver Mass L, Liver Mass H and Liver Mass W, system then automatically calculates Liver Mass Vol.
Stomach Wall	/	See “8.2.1.1 Distance (2D)”
Small Intestine Wall	/	See “8.2.1.1 Distance (2D)”
Mucosa	/	See “8.2.1.1 Distance (2D)”
Muscularis	/	See “8.2.1.1 Distance (2D)”
Colonic Wall	/	See “8.2.1.1 Distance (2D)”
Renal L	Renal Length	See “8.2.1.1 Distance (2D)”
Renal H	Renal Height	See “8.2.1.1 Distance (2D)”
Renal W	Renal Width	See “8.2.1.1 Distance (2D)”
Cortex	Renal Cortical Thickness	See “8.2.1.1 Distance (2D)”
Adrenal L	Adrenal Length	See “8.2.1.1 Distance (2D)”

Items	Description	Methods or Formula
Adrenal H	Adrenal Height	See “8.2.1.1 Distance (2D)”
Adrenal W	Adrenal Width	See “8.2.1.1 Distance (2D)”
Adrenal Vol	Adrenal Volume	Measure Adrenal L, Adrenal H and Adrenal W, system then automatically calculates Adrenal Vol.
Adrenal Mass Vol	Adrenal Mass Volume	Measure Adrenal Mass L, Adrenal Mass H and Adrenal Mass W, system then automatically calculates Adrenal Mass Vol.
CBD	Common Bile Duct	See “8.2.1.1 Distance (2D)”
Portal V Diam	Portal Vein Diameter	See “8.2.1.1 Distance (2D)”
CHD	Common hepatic duct	See “8.2.1.1 Distance (2D)”
GB L	Gallbladder Length	See “8.2.1.1 Distance (2D)”
GB H	Gallbladder Height	See “8.2.1.1 Distance (2D)”
GB W	Gallbladder Width	See “8.2.1.1 Distance (2D)”
GB Vol	Gallbladder Volume	Measure GB L, GB H and GB W, system then automatically calculates GB Vol.
GB wall th	Gallbladder Wall Thickness	See “8.2.1.1 Distance (2D)”
Gallstone	/	See “8.2.1.1 Distance (2D)”
Panc duct	Pancreatic Duct	See “8.2.1.1 Distance (2D)”
Panc head	Pancreatic Head	See “8.2.1.1 Distance (2D)”
Panc body	Pancreatic Body	See “8.2.1.1 Distance (2D)”
Panc tail	Pancreatic Tail	See “8.2.1.1 Distance (2D)”
Pancreas	/	See “8.2.1.1 Distance (2D)”
Panc Mass Vol	Pancreas Mass Vol	Measure Pancreas Mass L, Pancreas Mass H and Pancreas Mass W, system then automatically calculates Panc Mass Vol.
Spleen	/	See “8.2.1.1 Distance (2D)”
Spleen Mass Vol	Spleen Mass Volume	Measure Spleen Mass L, Spleen Mass H and Spleen Mass W, system then automatically calculates Spleen Mass Vol.
Aorta Diam	Aorta Diameter	See “8.2.1.1 Distance (2D)”

Items	Description	Methods or Formula
Aorta Bif	Aorta Bifurcation	See “8.2.1.1 Distance (2D)”
Iliac Diam	Iliac Diameter	See “8.2.1.1 Distance (2D)”
Uterine L	Uterine Length	See “8.2.1.1 Distance (2D)”
Uterine AP	Uterine Anteroposterior Diameter	See “8.2.1.1 Distance (2D)”
Uterine Trans	Uterine Transverse Diameter	See “8.2.1.1 Distance (2D)”
Uterine Wall	/	See “8.2.1.1 Distance (2D)”
Ovary L	Ovary Length	See “8.2.1.1 Distance (2D)”
Ovary AP	Ovary Anteroposterior Diameter	See “8.2.1.1 Distance (2D)”
Ovary Trans	Ovary Transverse Diameter	See “8.2.1.1 Distance (2D)”
Ovary Vol	Ovary Volume	Measure Ovary L, Ovary AP and Ovary Trans, system then automatically calculates Ovary Vol.
Ovary Mass Vol	Ovary Mass Volume	Measure Ovary Mass L, Ovary Mass H and Ovary Mass W, system then automatically calculates Ovary Mass Vol.
Iliac LN L	Iliac Lymph Node Length	See “8.2.1.1 Distance (2D)”
Iliac LN H	Iliac Lymph Node Height	See “8.2.1.1 Distance (2D)”
Iliac LN W	Iliac Lymph Node Width	See “8.2.1.1 Distance (2D)”
Iliac LN Vol	Iliac Lymph Node Volume	Measure Iliac LN L, Iliac LN H and Iliac LN W, system then automatically calculates Iliac LN Vol.
Mesenteric LN L	Mesenteric Lymph Node Length	See “8.2.1.1 Distance (2D)”
Mesenteric LN H	Mesenteric Lymph Node Height	See “8.2.1.1 Distance (2D)”
Mesenteric LN W	Mesenteric Lymph Node Width	See “8.2.1.1 Distance (2D)”
Mesenteric LN Vol	Mesenteric Lymph Node Volume	Measure Mesenteric LN L, Mesenteric LN H and Mesenteric LN W, system then automatically calculates Mesenteric LN Vol.
Hepatic LN L	Hepatic Lymph Node Length	See “8.2.1.1 Distance (2D)”
Hepatic LN H	Hepatic Lymph Node Height	See “8.2.1.1 Distance (2D)”
Hepatic LN W	Hepatic Lymph Node Width	See “8.2.1.1 Distance (2D)”

Items	Description	Methods or Formula
Hepatic LN Vol	Hepatic Lymph Node Volume	Measure Hepatic LN L, Hepatic LN H and Hepatic LN W, system then automatically calculates Hepatic LN Vol.
Prostate L	Prostate Length	See “8.2.1.1 Distance (2D)”
Prostate H	Prostate Height	See “8.2.1.1 Distance (2D)”
Prostate W	Prostate Width	See “8.2.1.1 Distance (2D)”
Prostate Vol	Prostate Volume	Measure Prostate L, Prostate H and Prostate W, system then automatically calculates Prostate Vol.
Prostate Mass Vol	Prostate Mass Volume	Measure Prostate Mass L, Prostate Mass H and Prostate Mass W, system then automatically calculates Prostate Mass Vol.
Seminal Vesicle L	Seminal Vesicle Length	See “8.2.1.1 Distance (2D)”
Seminal Vesicle H	Seminal Vesicle Height	See “8.2.1.1 Distance (2D)”
Seminal Vesicle W	Seminal Vesicle Width	See “8.2.1.1 Distance (2D)”
Pre-BL L	Pre-void Bladder Length	See “8.2.1.1 Distance (2D)”
Pre-BL H	Pre-void Bladder Height	See “8.2.1.1 Distance (2D)”
Pre-BL W	Pre-void Bladder Width	See “8.2.1.1 Distance (2D)”
Post-BL L	Post-void Bladder Length	See “8.2.1.1 Distance (2D)”
Post-BL H	Post-void Bladder Height	See “8.2.1.1 Distance (2D)”
Post-BL W	Post-void Bladder Width	See “8.2.1.1 Distance (2D)”
Bladder Wall	/	See “8.2.1.1 Distance (2D)”
Bladder Calculus	/	See “8.2.1.1 Distance (2D)”
Bladder Mass Vol	Bladder Mass Volume	Measure Bladder Mass L, Bladder Mass H and Bladder Mass W, system then automatically calculates Bladder Mass Vol.
Ureter	/	See “8.2.1.1 Distance (2D)”
Ureter Wall	/	See “8.2.1.1 Distance (2D)”
Ureter Calculus	/	See “8.2.1.1 Distance (2D)”
Renal Vol	Renal Volume	Measure Renal L, Renal H and Renal W, system then automatically calculates Renal Vol.

Items	Description	Methods or Formula
Renal Pelvis	/	See “8.2.1.1 Distance (2D)”
Renal Mass Vol	Renal Mass Volume	Measure Renal Mass L, Renal Mass H and Renal Mass W, system then automatically calculates Renal Mass Vol.
Renal Calculus	/	See “8.2.1.1 Distance (2D)”
Pre-BL Vol	Pre-void Bladder Volume	Measure Pre-BL L, Pre-BL H and Pre-BL W, system then automatically calculates Pre-BL Vol.
Post-BL Vol	Post-void Bladder Volume	Measure Post-BL L, Post-BL H and Post-BL W, system then automatically calculates Post-BL Vol.
Mictur.Vol	Micturated Volume	Measure Pre-BL Vol and Post-BL Vol, system then automatically calculates Mictur.Vol.

8.3.1.2 Doppler Mode

Table 34 Doppler Abdomen Measurement

Items	Subitems	Description	Methods or Formula
Renal Arterial	Ren A Org	Renal Artery Origin	See “8.2.3.5 D Trace”
	Arcuate A	Arcuate Artery	See “8.2.3.5 D Trace”
	Segment A	Segmental Artery	See “8.2.3.5 D Trace”
	Interlobar A	Interlobar Artery	See “8.2.3.5 D Trace”
	Renal A	Renal Artery	See “8.2.3.5 D Trace”
	M Renal A	Main Renal Artery	See “8.2.3.5 D Trace”
	Renal V	Renal Vein	See “8.2.3.5 D Trace”
ABD Arterial	Aorta	/	See “8.2.3.5 D Trace”
	Celiac Axis	/	See “8.2.3.5 D Trace”
	SMA	Superior Mesenteric Artery	See “8.2.3.5 D Trace”
	C Hepatic A	Common Hepatic Artery	See “8.2.3.5 D Trace”
	Hepatic A	Hepatic Artery	See “8.2.3.5 D Trace”
	Splenic A	Splenic Artery	See “8.2.3.5 D Trace”
ABD Venous	CaVC	Caudal Vena Cava	See “8.2.3.5 D Trace”
	Portal V	Portal Vein	See “8.2.3.5 D Trace”

Items	Subitems	Description	Methods or Formula
	M Portal V	Main Portal Vein	See “8.2.3.5 D Trace”
	Hepatic V	Hepatic Vein	See “8.2.3.5 D Trace”
	Lt Hepatic V	Left Hepatic Vein	See “8.2.3.5 D Trace”
	M Hepatic V	Middle Hepatic Vein	See “8.2.3.5 D Trace”
	Rt Hepatic V	Right Hepatic Vein	See “8.2.3.5 D Trace”
	Splenic V	Splenic Vein	See “8.2.3.5 D Trace”
	SMV	Superior Mesenteric Vein	See “8.2.3.5 D Trace”
RAR	/	Ratio of Renal Artery PS the Abdominal Aorta PS	RAR(no unit)=｜Renal A PS (cm/s) / Aorta PS (cm/s)｜
SMA/Ao	/	Ratio of Superior Mesenteric Artery PS and Abdominal Aorta PS	SMA/Ao (no unit)=｜SMA PS (cm/s) / Aorta PS (cm/s)｜
CA/Ao	/	Ratio of Celiac Axis PS and Abdominal Aorta PS	CA/Ao (no unit)=｜Celiac Axis PS (cm/s) / Aorta PS (cm/s)｜

8.3.2 Reproduction

NOTE: Before performing reproduction measurements, please make sure that the system date is accurate, otherwise, the GA and EDD will be calculated incorrectly.

8.3.2.1 2D Mode

The measurement items, calculation items and measurement method for 2D reproduction measurement are shown in the table below.

Animal	Items	Description	Methods or Formula
Cat	Cat HD	Cat Head Diameter	See “8.2.1.1 Distance (2D)”
	Cat BD	Cat Body Cavity Diameter	See “8.2.1.1 Distance (2D)”
Dog	Dog CRL	Dog Crown Rump Length	See “8.2.1.1 Distance (2D)”
	Dog GS	Dog Gestational Sac Diameter	See “8.2.1.1 Distance (2D)”
	Dog HD	Dog Head Diameter	See “8.2.1.1 Distance (2D)”
	Dog BD	Dog Body Cavity Diameter	See “8.2.1.1 Distance (2D)”
Equine	Equine GS-H	Equine Gestational Sac Diameter Horizontal	See “8.2.1.1 Distance (2D)”
	Equine GS-V	Equine Gestational Sac Diameter Vertical	See “8.2.1.1 Distance (2D)”

Animal	Items	Description	Methods or Formula
Bovine	Bovine CRL	Bovine Crown Rump Length	See “8.2.1.1 Distance (2D)”
	Bovine TD	Bovine Trunk Diameter	See “8.2.1.1 Distance (2D)”
	Bovine HD	Bovine Head Diameter	See “8.2.1.1 Distance (2D)”
Ovine	Ovine CRL	Ovine Crown Rump Length	See “8.2.1.1 Distance (2D)”
	Ovine BPD	Ovine Biparietal Diameter	See “8.2.1.1 Distance (2D)”
/	Body Length	/	See “8.2.1.1 Distance (2D)”

8.3.2.2 Doppler Mode

Items	Description	Methods or Formula
Umb A	Umbilical Artery	See “8.2.3.5 D Trace”
MCA	Middle Cerebral Artery	See “8.2.3.5 D Trace”
Fetal Ao	Fetal Aorta	See “8.2.3.5 D Trace”
Desc Aorta	Descending Aorta	See “8.2.3.5 D Trace”
Placenta A	Placental Artery	See “8.2.3.5 D Trace”
Duct Veno	Ductus Venosus	See “8.2.3.5 D Trace”

8.3.3 Cardiology

8.3.3.1 2D Mode

The measurement items, calculation items and measurement method for 2D cardiology measurement are shown in the table below.

Items	Description	Methods or Formula
Ao Diam(2D)	Aorta Diameter (2D)	See “8.2.1.1 Distance (2D)”
Ao Arch Diam(2D)	Aorta Arch Diameter (2D)	See “8.2.1.1 Distance (2D)”
Ao Asc Diam(2D)	Ascending Aorta Diameter (2D)	See “8.2.1.1 Distance (2D)”
Ao Desc Diam(2D)	Descending Aorta Diameter (2D)	See “8.2.1.1 Distance (2D)”
Ao Isthmus(2D)	Aorta Isthmus Diameter (2D)	See “8.2.1.1 Distance (2D)”
Ao st junct(2D)	Aorta ST junct Diameter (2D)	See “8.2.1.1 Distance (2D)”
Ao Sinus Diam(2D)	Aorta Sinus Diameter (2D)	See “8.2.1.1 Distance (2D)”
AVA	Aortic Valve Area	See “8.3.3.4 Cardiology Study and Calculation”

Items	Description	Methods or Formula
ASD Diam	Atrial Septal defect Diameter	See “8.2.1.1 Distance (2D)”
ACS(2D)	Aortic Valve Cusp Separation (2D)	See “8.2.1.1 Distance (2D)”
AV Diam	Aortic Valve Diameter	See “8.2.1.1 Distance (2D)”
Duct Art Diam	Ductus Arteriosus Diameter	See “8.2.1.1 Distance (2D)”
HR(Cube 2D)	Heart Rate(Cube 2D)	See “8.3.3.4 Cardiology Study and Calculation”
HR(Gibson 2D)	Heart Rate (Gibson 2D)	See “8.3.3.4 Cardiology Study and Calculation”
HR(Teich 2D)	Heart Rate (Teich 2D)	See “8.3.3.4 Cardiology Study and Calculation”
CaVC Diam(Expir)	Caudal Vena Cava Expiration Diameter	See “8.2.1.1 Distance (2D)”
CaVC Diam(Insp)	Caudal Vena Cava Inspiration Diameter	See “8.2.1.1 Distance (2D)”
IVSd(2D)	Interventricular Septal thickness at end-diastole (2D)	See “8.2.1.1 Distance (2D)”
IVSs(2D)	Interventricular Septal thickness at end-systole (2D)	See “8.2.1.1 Distance (2D)”
LA Area	Left Atrium area	See “8.2.1.2 Area & Circumference”
LA Diam(2D)	Left Atrium Diameter (2D)	See “8.2.1.1 Distance (2D)”
LA Major	Left Atrium Major Diameter	See “8.2.1.1 Distance (2D)”
LA Minor	Left Atrium Minor Diameter	See “8.2.1.1 Distance (2D)”
LCA Diam	Left Coronary Artery Diameter	See “8.2.1.1 Distance (2D)”
LPA Diam(2D)	Left Pulmonary Artery Diameter (2D)	See “8.2.1.1 Distance (2D)”
LV Area(d)	Left Ventricular area at end-diastole	See “8.3.3.4 Cardiology Study and Calculation”
LV Area(s)	Left Ventricular area at end-diastole	See “8.3.3.4 Cardiology Study and Calculation”
Diastole(Cube 2D)	End-diastolic Left Ventricular Measurement (Cube 2D)	See “8.3.3.4 Cardiology Study and Calculation”
Diastole(Gibson 2D)	End-diastolic Left Ventricular Measurement (Gibson 2D)	See “8.3.3.4 Cardiology Study and Calculation”
Diastole(Teich 2D)	End-diastolic Left Ventricular Measurement (Teich 2D)	See “8.3.3.4 Cardiology Study and Calculation”
LV Major	Left Ventricular Major Diameter	See “8.2.1.1 Distance (2D)”
LV Minor	Left Ventricular Minor Diameter	See “8.2.1.1 Distance (2D)”

Items	Description	Methods or Formula
Systole(Cube 2D)	End-systolic Left Ventricular Measurement	See “8.3.3.4 Cardiology Study and Calculation”
Systole(Gibson 2D)	End-systolic Left Ventricular Measurement (Gibson 2D)	See “8.3.3.4 Cardiology Study and Calculation”
Systole(Teich 2D)	End-systolic Left Ventricular Measurement (Teich 2D)	See “8.3.3.4 Cardiology Study and Calculation”
LVIDd(2D)	Left Ventricular Internal Diameter at end-diastole (2D)	See “8.2.1.1 Distance (2D)”
LVIDd(Cube 2D)	Left Ventricular Internal Diameter at end-diastole (Cube 2D)	See “8.2.1.1 Distance (2D)”
LVIDd(Gibson 2D)	Left Ventricular Internal Diameter at end-diastole (Gibson 2D)	See “8.2.1.1 Distance (2D)”
LVIDd(Teich 2D)	Left Ventricular Internal Diameter at end-diastole (Teich 2D)	See “8.2.1.1 Distance (2D)”
LVIDs(2D)	Left Ventricular Internal Diameter at end-systole (2D)	See “8.2.1.1 Distance (2D)”
LVIDs(Cube 2D)	Left Ventricular Internal Diameter at end-systole (Cube 2D)	See “8.2.1.1 Distance (2D)”
LVIDs(Gibson 2D)	Left Ventricular Internal Diameter at end-systole (Gibson 2D)	See “8.2.1.1 Distance (2D)”
LVIDs(Teich 2D)	Left Ventricular Internal Diameter at end-systole (Teich 2D)	See “8.2.1.1 Distance (2D)”
LVOT Diam	Left Ventricular Outflow Tract Diameter	See “8.2.1.1 Distance (2D)”
RVOT Diam	Right Ventricular Outflow Tract Diameter	See “8.2.1.1 Distance (2D)”
LVPWd(2D)	Left Ventricular Posterior wall thickness at end-diastole (2D)	See “8.2.1.1 Distance (2D)”
LVPWs(2D)	Left Ventricular Posterior wall thickness at end-systole (2D)	See “8.2.1.1 Distance (2D)”
MCS(2D)	Mitral Valve Cusp Separation (2D)	See “8.2.1.1 Distance (2D)”
MPA Diam(2D)	Main pulmonary Artery Diameter (2D)	See “8.2.1.1 Distance (2D)”
MVA	Mitral Valve Orifice Area	See “8.3.3.4 Cardiology Study and Calculation”
MV Diam	Mitral Valve Diameter	See “8.2.1.1 Distance (2D)”
MV EPSS(2D)	Distance between point E and Interventricular Septum when Mitral Valve is fully open (2D)	See “8.2.1.1 Distance (2D)”
PDA Diam	Patent Ductus Arteriosus Diameter	See “8.2.1.1 Distance (2D)”
PEd(2D)	Pericardial Effusion at diastole (2D)	See “8.2.1.1 Distance (2D)

Items	Description	Methods or Formula
PEs(2D)	Pericardial Effusion at systole (2D)	See “8.2.1.1 Distance (2D)
PFO Diam	Patent Oval Foramen Diameter	See “8.2.1.1 Distance (2D)”
Pre Ductal	Previous Ductal Diameter	See “8.2.1.1 Distance (2D)
Post Ductal	Posterior Ductal Diameter	See “8.2.1.1 Distance (2D)
PV Diam	Pulmonary Valve Diameter	See “8.2.1.1 Distance (2D)”
RA Area	Right Atrium Area	See “8.2.1.2 Area & Circumference
RA Major	Right Atrium Major Diameter	See “8.2.1.1 Distance (2D)
RA Minor	Right Atrium Minor Diameter	See “8.2.1.1 Distance (2D)
RCA Diam	Right Coronary Artery Diameter	See “8.2.1.1 Distance (2D)”
RPA Diam(2D)	Right Pulmonary Artery Diameter (2D)	See “8.2.1.1 Distance (2D)”
RPAD Index(2D)	Right pulmonary Artery Diameter Index (2D)	Measure maximum RPA Diam and minimum RPA Diam, system then automatically calculates RPAD Index. $RPAD\ Index(2D)(no\ unit) = (RPAD\ Max(2D)(cm) - RPAD\ Min(2D)(cm)) / RPAD\ Max(2D)(cm) \times 100\%$
RV Area(d)	Right Ventricular Area at end-diastole	See “8.2.1.2 Area & Circumference”
RV Area(s)	Right Ventricular Area at end-systole	See “8.2.1.2 Area & Circumference”
RV Major	Right Ventricular Major Diameter	See “8.2.1.1 Distance (2D)”
RV Minor	Right Ventricular Minor Diameter	See “8.2.1.1 Distance (2D)”
RVAWd(2D)	Right Ventricular Anterior Wall Thickness at end-diastole (2D)	See “8.2.1.1 Distance (2D)”
RVAWs(2D)	Right Ventricular Anterior Wall Thickness at end-systole (2D)	See “8.2.1.1 Distance (2D)”
RVDd(2D)	Right Ventricular Diameter at end-diastole (2D)	See “8.2.1.1 Distance (2D)”
RVDs(2D)	Right Ventricular Diameter at end-systole (2D)	See “8.2.1.1 Distance (2D)”
CrVC Diam(Expir)	Cranial Vena Cava Expiration Diameter	See “8.2.1.1 Distance (2D)”
CrVC Diam(Insp)	Cranial Vena Cava Inspiration Diameter	See “8.2.1.1 Distance (2D)”

Items	Description	Methods or Formula
TV Diam	Tricuspid Valve Diameter	See “8.2.1.1 Distance (2D)”
TVA	Tricuspid Valve Area	See “8.2.1.2 Area & Circumference”
VSD Diam	Ventricular Septal Defect Diameter	See “8.2.1.1 Distance (2D)”
LVAd sax MV(BP Ellipse)	Left ventricular area at mitral valve level at end-diastole in short-axis view (BP Ellipse)	See “8.2.1.2 Area & Circumference”
LVAs sax MV(BP Ellipse)	Left ventricular area at mitral valve level at end-systole in short-axis view (BP Ellipse)	See “8.2.1.2 Area & Circumference”
LVAd apical(BP Ellipse)	Left ventricular area at end-diastole in apical view (BP Ellipse)	See “8.2.1.2 Area & Circumference”
LVAs apical(BP Ellipse)	Left ventricular long axis length at end-systole in apical view (BP Ellipse)	See “8.2.1.2 Area & Circumference”
LVIDd(BP Ellipse)	Left Ventricular Internal Diameter at end-diastole (BP Ellipse)	See “8.2.1.1 Distance (2D)”
LVIDs(BP Ellipse)	Left Ventricular Internal Diameter at end-systole (BP Ellipse)	See “8.2.1.1 Distance (2D)”
HR(BP Ellipse)	Heart rate (BP Ellipse)	Obtained by ECG or entered directly
LVAd sax MV(Bullet)	Left ventricular area at mitral valve level at end-diastole in short-axis view (Bullet)	See “8.2.1.2 Area & Circumference”
LVAs sax MV(Bullet)	Left ventricular area at mitral valve level at end-systole in short-axis view (Bullet)	See “8.2.1.2 Area & Circumference”
LVLd apical(Bullet)	Left ventricular long axis length at end-diastole in apical view (Bullet)	See “8.2.1.1 Distance (2D)”
LVLs apical(Bullet)	Left ventricular long axis length at end-systole in apical view (Bullet)	See “8.2.1.1 Distance (2D)”
HR(Bullet)	Heart rate (Bullet)	Obtained by ECG or entered directly
LA Diam(LA Vol A-L)	Left Atrium Diameter (Left Atrium Volume A-L)	See “8.2.1.1 Distance (2D)”
LAA(A2C)	Left Atrium Area at Apical 2-Chamber view	See “8.2.1.2 Area & Circumference”
LAA(A4C)	Left Atrium Area at Apical 4-Chamber view	See “8.2.1.2 Area & Circumference”
LA Vol(A2C)	Left Atrium Volume at Apical 2-Chamber view	See “8.3.3.4 Cardiology Study and Calculation”
LA Vol(A4C)	Left Atrium Volume at Apical 4-Chamber view	See “8.3.3.4 Cardiology Study and Calculation”

Items	Description	Methods or Formula
LVAd sax Epi(LV Mass A-L)	Left Ventricular Epicardial Area at Papillary Muscle level at end-diastole in Short-axis view (LV Mass A-L)	See “8.2.1.2 Area & Circumference”
LVAd sax Endo(LV Mass A-L)	Left Ventricular Endocardial Area at Papillary Muscle level at end-diastole in Short-axis view (LV Mass A-L)	See “8.2.1.2 Area & Circumference”
LVLd apical(LV Mass A-L)	Left Ventricular Long-axis Length at end-systole in apical view (LV Mass A-L)	See “8.2.1.1 Distance (2D)”
IVSd(LV Mass Cube-2D)	Interventricular Septal thickness at end-diastole (Left Ventricular Mass A-L Cube-2D)	See “8.2.1.1 Distance (2D)”
LVIDd(LV Mass Cube-2D)	Left Ventricular Internal Diameter at end-diastole (Left Ventricular Mass A-L Cube-2D)	See “8.2.1.1 Distance (2D)”
LVPWd(LV Mass Cube-2D)	Left Ventricular Posterior wall thickness at end-diastole (LV Mass A-L Cube-2D)	See “8.2.1.1 Distance (2D)”
LVAd sax Epi(LV Mass T-E)	Left Ventricular Epicardial Area at Papillary Muscle level at end-diastole in Short-axis view (LV Mass T-E)	See “8.2.1.2 Area & Circumference”
LVAd sax Endo(LV Mass T-E)	Left Ventricular Endocardial Area at Papillary Muscle level at end-diastole in Short-axis view (LV Mass T-E)	See “8.2.1.2 Area & Circumference”
a	/	See “8.2.1.1 Distance (2D)”
d	/	See “8.2.1.1 Distance (2D)”
RA Vol(A4C)	Right Atrium Volume at Apical 4-Chamber view	See “8.3.3.4 Cardiology Study and Calculation”
LVLd apical(SP Ellipse)	Left ventricular long axis length at end-diastole in apical view (SP Ellipse)	See “8.2.1.1 Distance (2D)”
LVAd apical(SP Ellipse)	Left ventricular area at end-diastole in apical view (SP Ellipse)	See “8.2.1.2 Area & Circumference”
LVLs apical(SP Ellipse)	Left ventricular long axis length at end-systole in apical view (SP Ellipse)	See “8.2.1.1 Distance (2D)”
LVAs apical(SP Ellipse)	Left ventricular area at end-systole in apical view (SP Ellipse)	See “8.2.1.2 Area & Circumference”
HR(SP Ellipse)	Heart rate (SP Ellipse)	Obtained by ECG or entered directly
LVLd apical(Simp)	Left ventricular long axis length at end-diastole in apical view (Simp)	See “8.2.1.1 Distance (2D)”
LVLs apical(Simp)	Left ventricular long axis length at end-systole in apical view (Simp)	See “8.2.1.1 Distance (2D)”

Items	Description	Methods or Formula
LVAd sax MV(Simp)	Left ventricular area at mitral valve level at end-diastole in short-axis view (Simp)	See "8.2.1.2 Area & Circumference"
LVAs sax MV(Simp)	Left ventricular area at mitral valve level at end-systole in short-axis view (Simp)	See "8.2.1.2 Area & Circumference"
LVAd sax PM(Simp)	Left ventricular area at papillary muscle level at end-diastole in short axis view (Simp)	See "8.2.1.2 Area & Circumference"
LVAs sax PM(Simp)	Left ventricular area at papillary muscle level at end-systole in short axis view (Simp)	See "8.2.1.2 Area & Circumference"
HR(Mod Simp)	Heart rate (Mod. Simpson)	Obtained by ECG or entered directly
EDV(Simp BP-A2C)	End-diastolic Left Ventricular Volume (Simp BP-Apical 2-Chamber)	See "8.3.3.4 Cardiology Study and Calculation"
ESV(Simp BP-A2C)	End-systolic Left Ventricular Volume (Simp BP-Apical 2-Chamber)	See "8.3.3.4 Cardiology Study and Calculation"
EDV(Simp BP-A4C)	End-diastolic Left Ventricular Volume (Simp BP-Apical 4-Chamber)	See "8.3.3.4 Cardiology Study and Calculation"
ESV(Simp BP-A4C)	End-systolic Left Ventricular Volume (Simp BP-Apical 4-Chamber)	See "8.3.3.4 Cardiology Study and Calculation"
HR(Simp BP)	Heart Rate (Simp BP)	See "8.3.3.4 Cardiology Study and Calculation"
EDV(Simp SP-A2C)	End-diastolic Left Ventricular Volume (Simp SP-Apical 2-Chamber)	See "8.3.3.4 Cardiology Study and Calculation"
ESV(Simp SP-A2C)	End-systolic Left Ventricular Volume (Simp SP-Apical 2-Chamber)	See "8.3.3.4 Cardiology Study and Calculation"
HR(Simp SP A2C)	Heart Rate (Simp SP-Apical 2-Chamber)	See "8.3.3.4 Cardiology Study and Calculation"
EDV(Simp SP-A4C)	End-diastolic Left Ventricular Volume (Simp SP-Apical 4-Chamber)	See "8.3.3.4 Cardiology Study and Calculation"
ESV(Simp SP-A4C)	End-systolic Left Ventricular Volume (Simp SP-Apical 4-Chamber)	See "8.3.3.4 Cardiology Study and Calculation"
HR(Simp SP A4C)	Heart Rate (Simp SP-Apical 4-Chamber)	See "8.3.3.4 Cardiology Study and Calculation"
Ao/PA	Aorta diameter/Main Pulmonary Artery Diameter	$Ao\ Diam(cm)/MPA\ Diam(cm)$
LA/Ao(2D)	Left Atrium diameter/Aorta diameter	LA Diam (cm) / Ao Diam (cm)
Ao/LA(2D)	Aorta diameter/Left Atrium diameter	Ao Diam (cm) / LA Diam (cm)
LVSI	Left Ventricular Sphericity Index	$LVSI(no\ unit) = LVLd(A4C)(cm) /LVIDd(cm)$

Items		Description	Methods or Formula
Auto EF		Automated Ejection Fraction	See “8.3.3.4 Cardiology Study and Calculation”
Zola AI	LVSId(A4C)	Left Ventricular Sphericity Index at end-diastole (apical 4-chamber view)	See “8.3.3.4 Cardiology Study and Calculation”
	LVSId(LA4C)	Left Ventricular Sphericity Index at end-diastole (long-axis four-chamber view)	See “8.3.3.4 Cardiology Study and Calculation”
	LA/Ao	Left Atrium Diameter/Aorta Diameter	See “8.3.3.4 Cardiology Study and Calculation”

8.3.3.2 M Mode

The measurement items, calculation items and measurement method for M cardiology measurement are shown in the table below.

Table 35 M Cardiology Measurement

Items	Description	Methods or Formula
Ao Arch Diam(M)	Aorta Arch Diameter (M)	See “8.2.2.2 Distance (M)”
Ao Asc Diam(M)	Ascending Aorta Diameter (M)	See “8.2.2.2 Distance (M)”
Ao Desc Diam(M)	Descending Aorta Diameter (M)	See “8.2.2.2 Distance (M)”
Ao Diam(M)	Aorta Diameter (M)	See “8.2.2.2 Distance (M)”
Ao Isthmus(M)	Aorta Isthmus Diameter (M)	See “8.2.2.2 Distance (M)”
Ao Sinus Diam(M)	Aorta Sinus Diameter (M)	See “8.2.2.2 Distance (M)”
Ao st junct(M)	Aorta ST junct Diameter (M)	See “8.2.2.2 Distance (M)”
ACS(M)	Aortic Valve Cusp Separation (M)	See “8.2.2.2 Distance (M)”
HR(Cube M)	Heart Rate (Cube M)	See “8.2.2.1 HR (M)”
HR(Gibson M)	Heart Rate (Cube M)	See “8.2.2.1 HR (M)”
HR(Teich M)	Heart Rate (Cube M)	See “8.2.2.1 HR (M)”
CaVC Diam(Expir M)	Caudal Vena Cava Expiration Diameter (M)	See “8.2.2.2 Distance (M)”
CaVC Diam(Insp M)	Caudal Vena Cava Inspiration Diameter (M)	See “8.2.2.2 Distance (M)”
IVSd(M)	Interventricular Septal Thickness at end-diastole (M)	See “8.2.2.2 Distance (M)”
IVSs(M)	Interventricular Septal Thickness at end-systole (M)	See “8.2.2.2 Distance (M)”
LA Diam(M)	Left Atrium Diameter (M)	See “8.2.2.2 Distance (M)”
LA FS(M)	Left Atrium Fractional Shortening (M)	Measure maximum LA Diam

Items	Description	Methods or Formula
		and minimum LA Diam, system then automatically calculates LA FS(M). $LA\ FS(M)(no\ unit)$ $= (LAD\ Max(M)(cm)$ $- LAD\ Min(M)(cm))$ $/\ LAD\ Max(M)(cm) \times 100\%$
LPA Diam(M)	Left Pulmonary Artery Diameter (M)	See “8.2.2.2 Distance (M)”
Diastole(Cube M)	End-diastolic Left Ventricular Measurement (Cube 2D)	See “8.3.3.4 Cardiology Study and Calculation”
Diastole(Gibson M)	End-diastolic Left Ventricular Measurement (Gibson 2D)	See “8.3.3.4 Cardiology Study and Calculation”
Diastole(Teich M)	End-diastolic Left Ventricular Measurement (Teich 2D)	See “8.3.3.4 Cardiology Study and Calculation”
Systole(Cube M)	End-systolic Left Ventricular Measurement (Cube 2D)	See “8.3.3.4 Cardiology Study and Calculation”
Systole(Gibson M)	End-systolic Left Ventricular Measurement (Gibson 2D)	See “8.3.3.4 Cardiology Study and Calculation”
Systole(Teich M)	End-systolic Left Ventricular Measurement (Teich 2D)	See “8.3.3.4 Cardiology Study and Calculation”
LVET(M)	Left Ventricular Ejection Time (M)	See “8.2.2.3 Time (M)
LVIDd(Cube M)	Left Ventricular Internal Diameter at end-diastole (Cube M)	See “8.2.2.2 Distance (M)”
LVIDd(Gibson M)	Left Ventricular Internal Diameter at end-diastole (Gibson M)	See “8.2.2.2 Distance (M)”
LVIDd(Teich M)	Left Ventricular Internal Diameter at end-diastole (Teich M)	See “8.2.2.2 Distance (M)”
LVIDd(M)	Left Ventricular Internal Diameter at end-diastole (M)	See “8.2.2.2 Distance (M)”
LVIDs(M)	Left Ventricular Internal Diameter at end-systole (M)	See “8.2.2.2 Distance (M)”
LVIDs(Cube M)	Left Ventricular Internal Diameter at end-systole (Cube M)	See “8.2.2.2 Distance (M)”
LVIDs(Gibson M)	Left Ventricular Internal Diameter at end-systole (Gibson M)	See “8.2.2.2 Distance (M)”
LVIDs(Teich M)	Left Ventricular Internal Diameter at end-systole (Teich M)	See “8.2.2.2 Distance (M)”
LVPEP(M)	Left Ventricular Pre-Ejection Period (M)	See “8.2.2.3 Time (M)”
LVPWd(M)	Left Ventricular Posterior Wall Thickness at end-diastole (M)	See “8.2.2.2 Distance (M)”

Items	Description	Methods or Formula
LVPWs(M)	Left Ventricular Posterior Wall Thickness at end-systole (M)	See “8.2.2.2 Distance (M)”
MCS(M)	Mitral Valve Cusp Separation (M)	See “8.2.2.2 Distance (M)”
MPA Diam(M)	Main pulmonary Artery Diameter (M)	See “8.2.2.2 Distance (M)”
MV A Amp	Amplitude of the Mitral Valve A wave to C point	See “8.2.2.2 Distance (M)”
MV E Amp	Amplitude of the Mitral Valve E wave to C point	See “8.2.2.2 Distance (M)”
MV D-E Slope	Slope of the Mitral Valve D point to E point	See “8.2.2.4 Slope”
MV DE	Amplitude of the Mitral Valve D point to E point	See “8.2.2.2 Distance (M)”
MV E-F Slope	Slope of the Mitral Valve E point to F point	See “8.2.2.4 Slope”
MV EPSS(M)	Distance between point E and Interventricular Septum when Mitral Valve is fully open (M)	See “8.2.2.2 Distance (M)”
PEd(M)	Pericardial Effusion at diastole (M)	See “8.2.2.2 Distance (M)”
PEs(M)	Pericardial Effusion at systole (M)	See “8.2.2.2 Distance (M)”
RPA Diam(M)	Right pulmonary Artery Diameter (M)	See “8.2.2.2 Distance (M)”
RPAD Index(M)	Right pulmonary Artery Diameter Index (M)	Measure maximum RPA Diam and minimum RPA Diam, system then automatically calculates RPAD Index. $RPAD\ Index(M)(no\ unit) = (RPAD\ Max(M)(cm) - RPAD\ Min(M)(cm)) / RPAD\ Max(M)(cm) \times 100\%$
RVAWd(M)	Right Ventricular Anterior Wall Thickness at end-diastole (M)	See “8.2.2.2 Distance (M)”
RVAWs(M)	Right Ventricular Anterior Wall Thickness at end-systole (M)	See “8.2.2.2 Distance (M)”
RVDd(M)	Right Ventricular Diameter at end-diastole (M)	See “8.2.2.2 Distance (M)”
RVDs(M)	Right Ventricular Diameter at end-systole (M)	See “8.2.2.2 Distance (M)”
CrVC Diam(Expir M)	Caudal Vena Cava Expiration Diameter (M)	See “8.2.2.2 Distance (M)”
CrVC Diam(Insp M)	Caudal Vena Cava Inspiration Depth (M)	See “8.2.2.2 Distance (M)”

Items		Description	Methods or Formula
RVET(M)		Right Ventricular Ejection Time (M)	See “8.2.2.3 Time (M)”
RVPEP(M)		Right Ventricular Pre-Ejection Period (M)	See “8.2.2.3 Time (M)”
MAPSE		Mitral Annular Plane Systolic Excursion	See “8.2.2.2 Distance (M)”
TAPSE		Tricuspid Annular Plane Systolic Excursion	See “8.2.2.2 Distance (M)”
IVSd(LV Mass Cube-M)		Interventricular Septal Thickness at end-diastole (LV Mass Cube-M)	See “8.2.2.2 Distance (M)”
LVIDd(LV Mass Cube-M)		Left Ventricular Internal Diameter at end-diastole (LV Mass Cube-M)	See “8.2.2.2 Distance (M)”
LVPWd(LV Mass Cube-M)		Left Ventricular Posterior Wall Thickness at end-diastole (LV Mass Cube-M)	See “8.2.2.2 Distance (M)”
MV C-O dur		Mitral Valve Close-Open Duration	See “8.2.2.3 Time (M)”
LVET(LV Tei Index-M)		Left Ventricular Ejection Time	See “8.3.3.4 Cardiology Study and Calculation”
LA/Ao(M)		Left Atrium diameter/Aorta diameter (M)	LA Diam (cm) / Ao Diam (cm)
Ao/LA(M)		Aorta diameter/Left Atrium diameter (M)	Ao Diam (cm) / LA Diam (cm)
MV ALL		M wave measurement of mitral valve anterior leaflet	See “8.3.3.4 Cardiology Study and Calculation”
Zola AI	MV EPSS	Distance between point E and Interventricular Septum when Mitral Valve is fully open	See “8.3.3.4 Cardiology Study and Calculation”
	LV(M)	Left Ventricular Function (M)	See “8.3.3.4 Cardiology Study and Calculation”

8.3.3.3 Doppler Mode

The measurement items, calculation items and measurement method for Doppler cardiology measurement are shown in the table below.

Table 36 Doppler Cardiology Measurement

Items	Description	Methods or Formula
Lat A' Vel	Mitral Valve medial Late diastolic velocity	See “8.2.3.1 Vel”
Med A' Vel	Mitral Valve lateral Late diastolic velocity	See “8.2.3.1 Vel”
AAo Vmax	Ascending Aorta Peak Velocity	See “8.2.3.1 Vel”
AV VTI	Aortic Valve Velocity-Time Integral	See “8.2.3.5 D Trace”
AV Vmax	Aortic Valve Peak Velocity	See “8.2.3.1 Vel”

Items	Description	Methods or Formula
AR DecT	Aortic Valve Regurgitation Deceleration Time	See “8.2.3.3 Time (Doppler)”
AR PHT	Aortic Valve Regurgitation Pressure Half Time	See “8.3.3.4 Cardiology Study and Calculation”
AR Ved	Aortic Valve Regurgitation Velocity at end-diastole	See “8.2.3.1 Vel”
AR Vmax	Aortic Valve Regurgitation Peak Velocity	See “8.2.3.1 Vel”
AR VTI	Aortic Valve Regurgitation Velocity-Time Integral	See “8.2.3.5 D Trace”
Lat A-Rate	Mitral Valve lateral Acceleration Rate	See “8.2.3.1 Vel”
Med A-Rate	Mitral Valve medial Acceleration Rate	See “8.2.3.1 Vel”
ASD Vmax	Atrial Septal Defect Peak Velocity	See “8.2.3.1 Vel”
AV AccT	Aortic Valve Acceleration Time	See “8.2.3.3 Time (Doppler)”
AV DecT	Aortic Valve DecelerationTime	See “8.2.3.3 Time (Doppler)”
Coarc Pre-Duct	Coarctation of Pre-Ductus	See “8.2.3.1 Vel”
Coarc Post-Duct	Coarctation of Post-Ductus	See “8.2.3.1 Vel”
DAo Vmax	Descending Aorta Peak Velocity	See “8.2.3.1 Vel”
Lat D-Rate	Mitral Valve lateral Deceleration Rate	See “8.2.3.1 Vel”
Med D-Rate	Mitral Valve medial Deceleration Rate	See “8.2.3.1 Vel”
Lat E' Vel	Mitral Valve lateral Early diastolic velocity	See “8.2.3.1 Vel”
Med E' Vel	Mitral Valve medial Early diastolic velocity	See “8.2.3.1 Vel”
HR(Doppler)	Heart Rate (Doppler)	See “8.2.3.4 HR (Doppler)”
CaVC Vel(Expir)	Caudal Vena Cava Expiration Peak Velocity	See “8.2.3.1 Vel”
CaVC Vel(Insp)	Caudal Vena Cava Inspiration Peak Velocity	See “8.2.3.1 Vel”
IVCT	Isovolumic Contraction Time	See “8.2.3.3 Time (Doppler)”
LPA Vmax	Left Pulmonary Artery Peak Velocity	See “8.2.3.1 Vel”
LVET(D)	Left Ventricular Ejection Time (D)	See “8.2.3.3 Time (Doppler)”
LVOT AccT	Left Ventricular Outflow Tract Acceleration Time	See “8.2.3.3 Time (Doppler)”
LVOT VTI	Left Ventricular Outflow Tract Velocity-Time Integral	See “8.2.3.5 D Trace”

Items	Description	Methods or Formula
LVOT Vmax	Left Ventricular Outflow Tract Velocity	See “8.2.3.1 Vel”
LVPEP(D)	Left Ventricular Pre-ejection Period (D)	See “8.2.3.3 Time (Doppler)”
MPA Vmax	Main Pulmonary Artery Peak Velocity	See “8.2.3.1 Vel”
dP/dt	Rate of Pressure change	/
MR VTI	Mitral Valve Regurgitation Velocity-Time Integral	See “8.2.3.5 D Trace”
MR Vmax	Mitral Regurgitation Peak Velocity	See “8.2.3.1 Vel”
MS Vmax	Mitral Valve Stenosis Peak Velocity	See “8.2.3.1 Vel”
MV A Dur	Mitral Valve A-wave Duration	See “8.2.3.3 Time (Doppler)”
MV A Vel	Mitral Valve A-wave Velocity	See “8.2.3.1 Vel”
MV A VTI	Mitral Valve A-wave Velocity-Time Integral	See “8.2.3.5 D Trace”
MV AccT	Mitral Valve Acceleration Time	See “8.2.3.3 Time (Doppler)”
MV DecT	Mitral Valve Deceleration Time	See “8.2.3.3 Time (Doppler)”
MV E Dur	Mitral Valve E-wave Duration	See “8.2.3.3 Time (Doppler)”
MV E Vel	Mitral Valve E-wave Velocity	See “8.2.3.1 Vel””
MV E VTI	Mitral Valve E-wave Velocity-Time Integral	See “8.2.3.5 D Trace”
IVRT	Isovelocity Relaxation Time	See “8.2.3.3 Time (Doppler)”
MV VTI	Mitral Valve Velocity-Time Integral	See “8.2.3.5 D Trace”
MV Vmax	Mitral Valve Peak Velocity	See “8.2.3.1 Vel”
PVein A Dur	Pulmonary Vein A-wave Flow Duration	See “8.2.3.3 Time (Doppler)”
PVein A Vel	Pulmonary Vein A-wave Flow Velocity	See “8.2.3.1 Vel”
PVein D Vel	Pulmonary Vein D-wave Flow Velocity	See “8.2.3.1 Vel”
PVein D VTI	Pulmonary Vein D-wave Velocity-Time Integral	See “8.2.3.5 D Trace”
PVein DecT	Pulmonary Vein Deceleration Time	See “8.2.3.3 Time (Doppler)”
PVein S Vel	Pulmonary Vein S-wave Flow Velocity	See “8.2.3.1 Vel”
PVein S VTI	Pulmonary Vein S-wave Velocity-Time Integral	See “8.2.3.5 D Trace”
PDA Vel(d)	Patent Ductus Arteriosus Velocity at end-diastole	See “8.2.3.1 Vel”

Items	Description	Methods or Formula
PDA Vel(s)	Patent Ductus Arteriosus Velocity at end-systole	See “8.2.3.1 Vel”
PR PHT	Pulmonary Valve Regurgitation Pressure Half Time	See “8.3.3.4 Cardiology Study and Calculation”
PR VTI	Pulmonary Valve Regurgitation Velocity-Time Integral	See “8.2.3.5 D Trace”
PR Ved	Pulmonary Valve Regurgitation Velocity at end-diastole	See “8.2.3.1 Vel”
PR Vmax	Pulmonary Valve Regurgitation Peak Velocity	See “8.2.3.1 Vel”
PV AccT	Pulmonary Valve Acceleration Time	See “8.2.3.3 Time (Doppler)”
PV VTI	Pulmonary Valve Velocity-Time Integral	See “8.2.3.5 D Trace”
PV Vmax	Pulmonary Valve Peak Velocity	See “8.2.3.1 Vel””
RAP	Right Atrium Pressure	/
RPA Vmax	Right Pulmonary Artery Peak Velocity	See “8.2.3.1 Vel”
RVET(D)	Right Ventricular Ejection Time (D)	See “8.2.3.3 Time (Doppler)”
RVOT Vmax	Right Ventricular Outflow Tract Peak Velocity	See “8.2.3.1 Vel”
ROVT VTI	Right Ventricular Outflow Tract Velocity-Time Integral	See “8.2.3.5 D Trace”
RVPEP(D)	Right Ventricular Pre-Ejection Period (D)	See “8.2.3.3 Time (Doppler)”
Lat S Vel	Mitral Valve lateral Systolic velocity	See “8.2.3.1 Vel”
Med S Vel	Mitral Valve medial Systolic velocity	See “8.2.3.1 Vel”
CrVC Vel(Expir)	Cranial Vena Cava Expiration Peak Velocity	See “8.2.3.1 Vel”
CrVC Vel(Insp)	Cranial Vena Cava Inspiration Peak Velocity	See “8.2.3.1 Vel”
TR VTI	Tricuspid Valve Regurgitation Velocity-Time Integral	See “8.2.3.5 D Trace”
TR Vmax	Tricuspid Valve Regurgitation Peak Velocity	See “8.2.3.1 Vel”
TV A Dur	Tricuspid Valve A-wave Duration	See “8.2.3.3 Time (Doppler)”
TV A Vel	Tricuspid Valve A-wave Flow Velocity	See “8.2.3.1 Vel””
TV AccT	Tricuspid Valve Acceleration Time	See “8.2.3.3 Time (Doppler)”
TV DecT	Tricuspid Valve Deceleration Time	See “8.2.3.3 Time (Doppler)”
TV E Vel	Tricuspid Valve E-wave Flow Velocity	See “8.2.3.1 Vel”

Items	Description	Methods or Formula
TV VTI	Tricuspid Valve Velocity-Time Integral	See “8.2.3.5 D Trace”
TV Vmax	Tricuspid Valve Peak Velocity	See “8.2.3.1 Vel”
VSD Vmax	Ventricular Septal Defect Peak Velocity	See “8.2.3.1 Vel”
Hepatic V S Vel	Hepatic Vein Systolic Peak Velocity	See “8.2.3.1 Vel”
Hepatic V D Vel	Hepatic Vein Diastolic Peak Velocity	See “8.2.3.1 Vel”
MV HR	Mitral Valve Heart Rate	See “8.2.3.4 HR (Doppler)”
TV HR	Tricuspid valve Heart Rate	See “8.2.3.4 HR (Doppler)”
AV HR	Aortic Valve Heart Rate	See “8.2.3.4 HR (Doppler)”
PV HR	Pulmonary Valve Heart Rate	See “8.2.3.4 HR (Doppler)”
MV C-O dur(D)	Mitral Valve close-open Duration (D)	See “8.2.3.3 Time (Doppler)”
LVET(LV Tei Index-Doppler)	Left Ventricular Ejection Time	See “8.3.3.4 Cardiology Study and Calculation”
AR Rad	Aortic Valve Stenosis Radius	See “8.3.3.4 Cardiology Study and Calculation”
AR Als Vel	Aortic Valve Regurgitation Aliasing Peak Velocity	See “8.3.3.4 Cardiology Study and Calculation”
MR Rad	Mitral Valve Stenosis Radius	See “8.3.3.4 Cardiology Study and Calculation”
MR Als Vel	Mitral Valve Regurgitation Aliasing Peak Velocity	See “8.3.3.4 Cardiology Study and Calculation”
PR Rad	Pulmonary Valve Stenosis Radius	See “8.3.3.4 Cardiology Study and Calculation”
PR Als Vel	Pulmonary Valve Regurgitation Aliasing Peak Velocity	See “8.3.3.4 Cardiology Study and Calculation”
TR Rad	Tricuspid Valve Stenosis Radius	See “8.3.3.4 Cardiology Study and Calculation”
TR Als Vel	Tricuspid Valve Regurgitation Aliasing Peak Velocity	See “8.3.3.4 Cardiology Study and Calculation”
TV C-O dur	Tricuspid Valve close-open Duration	See “8.2.3.3 Time (Doppler)”
RVET(RV Tei Index)	Right Ventricular Ejection Time	See “8.2.3.3 Time (Doppler)”
MV E/A	Mitral Valve E-Vel/A-Vel	$\mathrm{MVE/A}(nounit) = \frac{\mathrm{MV\ E\ Vel(cm/s)}}{\mathrm{MV\ A\ Vel(cm/s)}}$
MVA(PHT)	Mitral Valve Orifice Area (PHT)	$\mathrm{MVA(PHT)(cm^2)} = \frac{220}{\mathrm{MV\ PHT(ms)}}$

Items		Description	Methods or Formula
TV E/A		Tricuspid Valve E-Vel/A-Vel	$\mathrm{TVE/A}(nounit) = \frac{\mathrm{TV\ E\ Vel(cm/s)}}{\mathrm{TV\ A\ Vel(cm/s)}}$
TVA(PHT)		Tricuspid Valve Orifice Area (PHT)	$\mathrm{TVA(PHT)(cm^2)} = \frac{220}{\mathrm{TV\ PHT(ms)}}$
LAA Ev		Left Atrial Appendage Peak Emptying Velocity	See "8.2.3.1 Vel"
Zola AI	dP/dt (Doppler)	Rate of Pressure change (Doppler)	See "8.3.3.4 Cardiology Study and Calculation"

8.3.3.4 Cardiology Study and Calculation

- **Simpson SP**

Measurement and study	Description	Method and Formula
EDV (Simp SP-A2C/A4C)	End-diastolic Left Ventricular Volume	$\mathrm{EDV(ml)} = \pi \times \frac{LVLd\ apical(cm)}{20} \times \sum_{i=1}^{20} r_i^2\ (cm)$ LVLd apical: left Ventricular Long-axis Length at End-diastole in apical view r_i: radius measured during diastole
ESV (Simp SP-A2C/A4C)	End-systolic Left Ventricular Volume	$\mathrm{ESV(ml)} = \pi \times \frac{LVLs\ apical(cm)}{20} \times \sum_{i=1}^{20} r_i^2\ (cm)$ LVLs apical: left Ventricular Long-axis Length at End-systole in apical view r_i: radius measured during systole
EDV Index (Simp SP-A2C/A4C)	End-diastolic Left Ventricular Volume Index	$EDV\ Index\mathrm{(No\ unit)} = \mathrm{EDV(ml)/BSA}(m^2)$
ESV Index (Simp SP-A2C/A4C)	End-systolic Left Ventricular Volume Index	$ESV\ Index\mathrm{(No\ unit)} = \mathrm{ESV(ml)/BSA}(m^2)$
HR (Simp SP-A2C/A4C)	Heart Rate	Obtained by ECG or entered directly
SV	Stroke Volume	$SV(ml) = EDV(ml) - ESV(ml)$
CO	Cardiac Output	$CO(l/min) = SV(ml) \times HR(bpm)/\ 1000$
EF	Ejection Fraction	$EF(No\ unit) = SV(ml)/\ EDV(ml)$
SI	SV Index	$SI(No\ unit) = SV(ml)/\ BSA\ (m^2)$
CI	CO Index	$CI(No\ unit) = CO(l/min)/BSA\ (m^2)$

➢ **Simpson BP**

Measurement and study	Description	Method and Formula
EDV (Simp BP-A2C/A4C)	End-diastolic Left Ventricular Volume	*1
ESV (Simp BP-A2C/A4C)	End-systolic Left Ventricular Volume	*2
EDV Index (Simp BP-A2C/A4C)	End-diastolic Left Ventricular Volume Index	$EDV\ Index(\text{No unit}) = \text{EDV(ml)}/\text{BSA}(m^2)$
ESV Index (Simp BP-A2C/A4C)	End-systolic Left Ventricular Volume Index	$ESV\ Index(\text{No unit}) = \text{ESV(ml)}/\text{BSA}(m^2)$
HR(Simp BP)	Heart Rate	Obtained by ECG or entered directly
SV(Simp BP)	Stroke Volume	$SV(ml) = EDV(ml) - ESV(ml)$
CO(Simp BP)	Cardiac Output	$CO(l/min) = SV(ml) \times HR(bpm)/1000$
EF(Simp BP)	Ejection Fraction	$EF(No\ unit) = SV(ml)/EDV(ml)$
SI(Simp BP)	SV Index	$SI(No\ unit) = SV(ml)/BSA\ (m^2)$
CI(Simp BP)	CO Index	$CI(No\ unit) = CO(l/min)/BSA\ (m^2)$

*1 Means:

$$EDV(ml) = \pi \times {MAX\{LVLd_{2i}(cm), LVLd_{4i}(cm)\}}/{20} \times \sum_{i=1}^{20}(r_{2i}(cm) \times r_{4i}(cm))$$

*2 Means:

$$ESV(ml) = \pi \times {MAX\{LVLs_{2i}(cm), LVLs_{4i}(cm)\}}/{20} \times \sum_{i=1}^{20}(r_{2i}(cm) \times r_{4i}(cm))$$

LV volume (A2C):

$$EDV\ (2ml) = \pi \times \frac{LVLd_{2i}\ (cm)}{20} \times \sum_{i=1}^{20} r_{2i}^2\ (cm)$$

$$ESV\ (2ml) = \pi \times \frac{LVLs_{2i}\ (cm)}{20} \times \sum_{i=1}^{20} r_{2i}^2\ (cm)$$

LV volume(A4C):

$$EDV\ (4ml) = \pi \times \frac{LVLd_{4i}\ (cm)}{20} \times \sum_{i=1}^{20} r_{4i}^2\ (cm)$$

$$ESV\ (4ml) = \pi \times \frac{LVLs_{4i}\ (cm)}{20} \times \sum_{i=1}^{20} r_{4i}^2\ (cm)$$

Note: When using Simpson BP to measure LV function, be sure to keep the apical four-chamber view and apical two-chamber view perpendicular. Otherwise the measure result will be incorrect.

- **Cube**

Measurement and study	Description	Method and Formula
Diastole	End-diastolic Left Ventricular Measurement	FoldLine in 2D mode or Parallel method in M mode
Systole	End-systolic Left Ventricular Measurement	FoldLine in 2D mode or Parallel method in M mode
LVIDd	Left Ventricular Internal Diameter at end-diastole	Distance in 2D/M General Measurements
LVIDs	Left Ventricular Internal Diameter at end-systole	Distance in 2D/M General Measurements
HR	Heart Rate	Obtained by ECG or entered directly
IVSd	Interventricular Septal Thickness at end-diastole	Distance in 2D/M General Measurements
LVPWd	Left Ventricular Posterior Wall Thickness at end-diastole	Distance in 2D/M General Measurements
IVSs	Interventricular Septal Thickness at end-systole	Distance in 2D/M General Measurements
LVPWs	Left Ventricular Posterior Wall Thickness at end-systole	Distance in 2D/M General Measurements
EDV(Cube)	End-diastolic Left Ventricular Volume	$\mathrm{EDV(ml)} = (\mathrm{LVIDd(cm)})^3$
ESV(Cube)	End-systolic Left Ventricular Volume	$\mathrm{ESV(ml)} = (\mathrm{LVIDs(cm)})^3$
EDV Index (Cube)	End-diastolic Left Ventricular Volume Index	$EDV\ Index(\mathrm{No\ unit}) = \mathrm{EDV(ml)/BSA}(m^2)$
ESV Index (Cube)	End-systolic Left Ventricular Volume Index	$ESV\ Index(\mathrm{No\ unit}) = \mathrm{ESV(ml)/BSA}(m^2)$
SV (Cube)	Stroke Volume	$SV(ml) = \mathrm{EDV(ml)} - \mathrm{ESV(ml)}$
CO (Cube)	Cardiac Output	$CO(\mathrm{l/min}) = \mathrm{SV(ml)} \times \mathrm{HR(bpm)}/1000$
EF (Cube)	Ejection Fraction	$EF(\mathrm{No\ unit}) = \mathrm{SV(ml)/EDV(ml)}$
SI (Cube)	SV Index	$SI(\mathrm{No\ unit}) = \mathrm{SV(ml)/BSA}(m^2)$
CI (Cube)	CO Index	$CI(\mathrm{No\ unit}) = CO(\mathrm{l/min})/\mathrm{BSA}(m^2)$

Measurement and study	Description	Method and Formula
FS (Cube)	Fractional Shortening	$FS(No\ unit) = \big(LVIDd(cm) - LVIDs(cm)\big)/LVIDd(cm)$
MVCF (Cube)	Mean Velocity of Circumferential Fiber Shortening	$\mathrm{MVCF} = \big(\mathrm{LVIDd(cm)} - \mathrm{LVIDs(cm)}\big) / \big(\mathrm{LVIDd(cm)} \times \mathrm{LVET(s)}\big)$
LVIDdN (Cube)	Left Ventricular Internal Diameter at end-diastole Normalized for body weight	$LVIDdN = LVIDd(cm)/body\ weight(kg)^{0.294}$
LVIDsN (Cube)	Left Ventricular Internal Diameter at end-systole Normalized for body weight	$LVIDsN = LVIDs(cm)/body\ weight(kg)^{0.294}$

- **Teichholz**

Measurement and study	Description	Method and Formula
Diastole	End-diastolic Left Ventricular Measurement	FoldLine in 2D mode or Parallel method in M mode
Systole	End-systolic Left Ventricular Measurement	FoldLine in 2D mode or Parallel method in M mode
LVIDd	Left Ventricular Internal Diameter at end-diastole	Distance in 2D/M General Measurements
LVIDs	Left Ventricular Internal Diameter at end-systole	Distance in 2D/M General Measurements
HR	Heart Rate	Obtained by ECG or entered directly
IVSd	Interventricular Septal Thickness at end-diastole	Distance in 2D/M General Measurements
LVPWd	Left Ventricular Posterior Wall Thickness at end-diastole	Distance in 2D/M General Measurements
IVSs	Interventricular Septal Thickness at end-systole	Distance in 2D/M General Measurements
LVPWs	Left Ventricular Posterior Wall Thickness at end-systole	Distance in 2D/M General Measurements
EDV(Teichholz)	End-diastolic Left Ventricular Volume	$EDV(ml) = (7 \times \big(LVIDd(cm)\big)^3)/(2.4 + LVIDd(cm))$
ESV(Teichholz)	End-systolic Left Ventricular Volume	$ESV(\mathrm{ml}) = (7 \times \big(\mathrm{LVIDs(cm)}\big)^3)/(2.4 + LVIDs(cm))$
EDV Index (Teichholz)	End-diastolic Left Ventricular Volume Index	$EDV\ Index(\mathrm{No\ unit}) = \mathrm{EDV(ml)}/\mathrm{BSA}(m^2)$
ESV Index (Teichholz)	End-systolic Left Ventricular Volume Index	$ESV\ Index(\mathrm{No\ unit}) = \mathrm{ESV(ml)}/\mathrm{BSA}(m^2)$

Measurement and study	Description	Method and Formula
SV (Teichholz)	Stroke Volume	$SV(ml) = \mathrm{EDV(ml)} - \mathrm{ESV(ml)}$
CO (Teichholz)	Cardiac Output	$CO(\mathrm{l/min}) = \mathrm{SV(ml)} \times \mathrm{HR(bpm)}/1000$
EF (Teichholz)	Ejection Fraction	$EF(\mathrm{No\ unit}) = \mathrm{SV(ml)}/\mathrm{EDV(ml)}$
FS (Teichholz)	Fractional Shortening	$FS(No\ unit) = \big(LVIDd(cm) - LVIDs(cm)\big)/LVIDd(cm)$
MVCF (Teichholz)	Mean Velocity of Circumferential Fiber Shortening	$\mathrm{MVCF} = \big(\mathrm{LVIDd(cm)} - \mathrm{LVIDs(cm)}\big) / \big(\mathrm{LVIDd(cm)} \times \mathrm{LVET(s)}\big)$
SI (Teichholz)	SV Index	$SI(\mathrm{No\ unit}) = \mathrm{SV(ml)}/\mathrm{BSA}(m^2)$
CI (Teichholz)	CO Index	$CI(\mathrm{No\ unit}) = CO(\mathrm{l/min})/\mathrm{BSA}(m^2)$
LVIDdN (Cube)	Left Ventricular Internal Diameter at end-diastole Normalized for body weight	$LVIDdN = LVIDd(cm)/body\ weight(kg)^{0.294}$
LVIDsN (Cube)	Left Ventricular Internal Diameter at end-systole Normalized for body weight	$LVIDsN = LVIDs(cm)/body\ weight(kg)^{0.294}$

- **Gibson**

Measurement and study	Description	Method and Formula
Diastole	End-diastolic Left Ventricular Measurement	FoldLine in 2D mode or Parallel method in M mode
Systole	End-systolic Left Ventricular Measurement	FoldLine in 2D mode or Parallel method in M mode
LVIDd	Left Ventricular Internal Diameter at end-diastole	Distance in 2D/M General Measurements
LVIDs	Left Ventricular Internal Diameter at end-systole	Distance in 2D/M General Measurements
HR	Heart Rate	Obtained by ECG or entered directly
IVSd	Interventricular Septal Thickness at end-diastole	Distance in 2D/M General Measurements
LVPWd	Left Ventricular Posterior Wall Thickness at end-diastole	Distance in 2D/M General Measurements
IVSs	Interventricular Septal Thickness at end-systole	Distance in 2D/M General Measurements
LVPWs	Left Ventricular Posterior Wall Thickness at end-systole	Distance in 2D/M General Measurements

Measurement and study	Description	Method and Formula
EDV(Gibson)	End-diastolic Left Ventricular Volume	$EDV(ml) = \pi/6 \times (0.98 \times LVIDd(cm)) + 5.90) \times (\mathrm{LVIDd(cm)})^2$
ESV(Gibson)	End-systolic Left Ventricular Volume	$ESV(ml) = \pi/6 \times (1.14 \times LVIDs(cm)) + 4.18) \times (\mathrm{LVIDs(cm)})^2$
EDV Index (Gibson)	End-diastolic Left Ventricular Volume Index	$EDV\ Index(\mathrm{No\ unit}) = \mathrm{EDV(ml)/BSA}(m^2)$
ESV Index (Gibson)	End-systolic Left Ventricular Volume Index	$ESV\ Index(\mathrm{No\ unit}) = \mathrm{ESV(ml)/BSA}(m^2)$
SV (Gibson)	Stroke Volume	$SV(ml) = \mathrm{EDV(ml) - ESV(ml)}$
CO (Gibson)	Cardiac Output	$CO(\mathrm{l/min}) = \mathrm{SV(ml) \times HR(bpm)/1000}$
EF (Gibson)	Ejection Fraction	$EF(\mathrm{No\ unit}) = \mathrm{SV(ml)/EDV(ml)}$
FS (Gibson)	Fractional Shortening	$FS(No\ unit) = (LVIDd(cm) - LVIDs(cm))/LVIDd(cm)$
MVCF (Gibson)	Mean Velocity of Circumferential Fiber Shortening	$\mathrm{MVCF} = (\mathrm{LVIDd(cm) - LVIDs(cm)})/(\mathrm{LVIDd(cm) \times LVET(s)})$
SI (Gibson)	SV Index	$SI(\mathrm{No\ unit}) = \mathrm{SV(ml)/BSA}(m^2)$
CI (Gibson)	CO Index	$CI(\mathrm{No\ unit}) = CO(\mathrm{l/min})/\mathrm{BSA}(m^2)$
LVIDdN (Cube)	Left Ventricular Internal Diameter at end-diastole Normalized for body weight	$LVIDdN = LVIDd(cm)/body\ weight(kg)^{0.294}$
LVIDsN (Cube)	Left Ventricular Internal Diameter at end-systole Normalized for body weight	$LVIDsN = LVIDs(cm)/body\ weight(kg)^{0.294}$

- **LV Mass**

Estimate the Index of Left Ventricular Mass (LV Mass-I) by calculating the LV Mass.

LV Mass（Cube)

Measurement and study	Description	Method and Formula
IVSd	Interventricular Septal Thickness at end-diastole	Distance in 2D/M General Measurements
LVIDd	Left Ventricular Internal Diameter at end-diastole	Distance in 2D/M General Measurements
LVPWd	Left Ventricular Posterior Wall Thickness at end-diastole	Distance in 2D/M General Measurements

Measurement and study	Description	Method and Formula
LV Mass (Cube)	Left Ventricular Mass	*1
LV MASS-I (Cube)	Index of Left Ventricular Mass	*2
LVIDdN (LV Mass Cube-M)	Left Ventricular Internal Diameter at end-diastole Normalized for body weight	*3

*1 Means:

$$LV\ Mass(g)$$
$$= \left\{0.8 \times \left[1.04 \times \left(\left(LVPWd(cm) + IVSd(cm) + LVIDd(cm)\right)^3 - \left(LVIDd(cm)\right)^3\right)\right]\right\} + 0.6$$

*2 Means:

$$LV\ Mass\text{-}I(No\ unit) = LV\ Mass(g)/BSA(m^2)$$

*3 Means:

$$LVIDdN = LVIDd(cm)/body\ weight(kg)^{0.294}$$

LV Mass (A-L)

Measurement and study	Description	Method and Formula
LVAd sax Epi	Left Ventricular Epicardial Area at Papillary Muscle level at end-diastole in Short-axis view	Distance in 2D/M General Measurements
LVAd sax Endo	Left Ventricular Endocardial Area at Papillary Muscle level at end-diastole in Short-axis view	Distance in 2D/M General Measurements
LVLd apical	Left Ventricular Long-axis Length at end-diastole in apical view	Distance in 2D/M General Measurements
LV Mass (A-L)	Left Ventricular Mass	*1
LV MASS-I (A-L)	Index of Left Ventricular Mass	*2

*1 Means:

$$LV\ Mass(g)$$
$$= 1.05 \times 5/6 \times (LVAd\ sax\ Epi(cm^2) \times (LVLd\ apical(cm) + t(cm))$$
$$- LVAd\ sax\ Endo(cm^2) \times LVL(cm))$$

$$t(cm) = \sqrt{\left(\frac{LVAd\ sax\ Epi(cm^2)}{\pi}\right)} - \sqrt{\left(\frac{(LVAd\ sax\ Endo(cm^2)}{\pi}\right)}$$

*2 Means:

$$LV\ Mass\text{-}I\ (No\ unit)\ =\ LV\ Mass\ (g)\ /\ BSA\ (m^2)$$

LV Mass (T-E)

Measurement and study	Description	Method and Formula
LVAd sax Epi	Left Ventricular Epicardial Area at Papillary Muscle level at end-diastole in Short-axis view	Area in 2D General Measurements
LVAd sax Endo	Left Ventricular Endocardial Area at Papillary Muscle level at end-diastole in Short-axis view	Area in 2D General Measurements
a	Semi-major axis from widest minor axis radius to apex	Distance in 2D General Measurements
b	Truncated semi-major axis from widest minor axis radius to mitral annulus plane	Distance in 2D General Measurements
LV Mass (T-E)	Left Ventricular Mass	*1
LV MASS-I (T-E)	Index of Left Ventricular Mass	*2

*1 Means:

$$LV\ Mass(g) = 1.05\pi \times \left\{(b+t)^2 \times \left[\frac{2(a+t)}{3} + d - \frac{d^3}{3(a+t)^2}\right] - b^2 \times \left(\frac{2a}{3} + d - \frac{d^3}{3a^2}\right)\right\}$$

$$t(cm) = \sqrt{\left(\frac{LVAd\ sax\ Epi(cm^2)}{\pi}\right)} - \sqrt{\left(\frac{(LVAd\ sax\ Endo(cm^2)}{\pi}\right)}$$

$$b(cm) = \sqrt{\frac{LVAd\ sax\ Endo(cm^2)}{\pi}}$$

*2 Means:

$$LV\ Mass\text{-}I\ (No\ unit)\ =\ LV\ Mass\ (g)\ /\ BSA\ (m^2)$$

- **Mitral Valve Area (MVA)**

Mitral Valve Area (MVA) can be calculated by two methods: pressure half time (PHT) or velocity- time integral (VTI).

MVA (PHT)

The formula for calculating MVA by the PHT method is as follows:

$$MVA(PHT)(cm^2) = \frac{220}{MV\ PHT(ms)}$$

MVA (VTI)

Measurement and study	Description	Method and Formula
LVOT Diam	Left Ventricular Outflow Tract Diameter	Distance in 2D General Measurements
LVOT VTI	Left Ventricular Outflow Tract Velocity-Time Integral	D trace in Doppler General Measurement
MV VTI	Mitral Valve Velocity-Time Integral	D trace in Doppler General Measurement
MVA(VTI)	Mitral Valve Area	*1

*1 Means:

$$MVA(VTI)(cm^2) = \frac{\pi \times |LVOT\ VTI(cm)| \times LVOT\ Diam(cm^2)^2}{4 \times |MV\ VTI(cm)|}$$

- **AVA (VTI)**

Aortic Valve Area (AVA) can be calculated by velocity-time integral (VTI).

Measurement and study	Description	Method and Formula
LVOT Diam	Left Ventricular Outflow Tract Diameter	Distance in 2D General Measurements
LVOT VTI	Left Ventricular Outflow Tract Velocity-Time Integral	D trace in Doppler General measurements
AV VTI	Aortic Valve Velocity-Time Integral	D trace in Doppler General measurements
AV HR	Aortic Valve Heart Rate	Obtained by ECG or entered directly
AVA(VTI)	Aortic Valve Area	*1

*1 Means:

$$AVA(VTI)(cm^2) = \frac{\pi \times |LVOT\ VTI(cm)| \times LVOT\ Diam(cm^2)^2}{4 \times |AV\ VTI(cm)|}$$

- **LA Vol**

LA Vol (A-L)

Measurement and study	Description	Method and Formula
LA Diam	Left Atrium Diameter	Distance in 2D General Measurements
LAA(A2C)	Left Atrium Area at apical 2-chamber view	Area in 2D General Measurements
LAA(A4C)	Left Atrium Area at apical 4-chamber view	Area in 2D General Measurements

Measurement and study	Description	Method and Formula
LA Vol(A-L)	Left Atrium Area	*1

*1 Means:

$$LA\ Vol(A-L)(ml) = \frac{8\pi}{3} LAA(A4C)(cm^2) \times LAA(A2C)(cm^2)/LA\ Diam(cm)$$

LA Vol (Simp)

Measurement and study	Description	Method and Formula
LA Vol(A2C)	Left Atrium Volume at apical 2-chamber view	Same as Simpson SP measurement
LA Vol(A4C)	Left Atrium Volume at apical 4-chamber view	Same as Simpson SP measurement

- **RA Vol (Simp)**

Measurement and study	Description	Method and Formula
RA Vol(A4C)	Right Atrium Volume at apical 4-chamber view	Same as Simpson SP measurement

- **RVSP**

Measurement and study	Description	Method and Formula
TR Vmax	Tricuspid Valve Regurgitation Peak Velocity	D Vel in Doppler General Measurements
RAP	Right Atrium Pressure	Enter manually
TR PGmax	Tricuspid Valve Regurgitation Pressure Gradient	*1
RVSP	Right Ventricular Systolic Pressure	*2

*1 Means:

$$TR\ PGmax(mmHg) = 4 \times TR\ Vmax\ (m/s)^2$$

*2 Means:

$$RVSP(mmHg) = RAP(mmHg) + 4 \times (TR\ V\ max(m/s))^2$$

- **PAEDP**

Measurement and study	Description	Method and Formula
PR Ved	Pulmonary Valve Regurgitation Velocity at end-diastole	D Vel in Doppler General Measurements

Measurement and study	Description	Method and Formula
RAP	Right Atrium Pressure	Enter manually
PR PGed	Pulmonary Valve Regurgitation Pressure Gradient at end-diastole	/
PAEDP	Pulmonary Pressure at end-diastole	*1

*1 Means:

$$PAEDP(mmHg) = RAP(mmHg) + 4 \times (PR\ Ved\ (m/s))^2$$

- **RV Tei Index (RVIMP)**

Measurement and study	Description	Method and Formula
TV C-O dur	Tricuspid Valve close-open Duration	Time in Doppler General Measurements
RVET	Right Ventricular Ejection Time	Time in Doppler General Measurements
RVIMP	Right Ventricular Index of Myocardial Performance	*1

*1 Means:

$$RVIMP(no\ unit) = \frac{TV\ C\text{-}O\ dur(s) - RVET(s)}{RVET(s)}$$

- **LV Tei Index (LVIMP)**

Measurement and study	Description	Method and Formula
MV C-O dur	Mitral Valve close-open Duration	Time in Doppler General Measurements
LVET	Left Ventricular Ejection Time	Time in Doppler General Measurements
LVIMP	Left Ventricular Index of Myocardial Performance	*1

*1 Means:

$$LVIMP(no\ unit) = \frac{MV\ C\text{-}O\ dur(s) - LVET(s)}{LVET(s)}$$

- **PISA**

PISA (Proximal Isovelocity Surface Area) is used in quantitative analysis of the mitral valve regurgitation (PISA MR), aortic valve regurgitation (PISA AR), tricuspid valve regurgitation (PISA TR), and pulmonary valve regurgitation (PISA PR) in color mode.

Perform the following steps:

1. Press the **[Caliper]** button on the control panel to start measurement.

2. Click **[PISA]** in the measurement menu or the touch screen, and the cursor appears.
3. Move the cursor to the center point of the semicircular and press the **[Set]** button.
4. Roll the trackball to adjust the radius length orientation of the semicircular and then press the **[Set]** button.
5. Results are displayed in the result window.

PISA MR

NOTE : Only applicable for Color and Doppler modes.

Measurement and study	Description	Method and Formula
MR Rad	Mitral Valve Stenosis Radius	PISA measurement
MR VTI	Mitral Valve Regurgitation Velocity-Time Integral	D Trace in Doppler General Measurements
MR Als Vel	Mitral Valve Regurgitation Aliasing Peak Velocity	You can select to use top aliasing velocity or bottom aliasing velocity or input the value directly
MR Vmax	Mitral Regurgitation Peak Velocity	Obtained from MR VTI measurement
MR Flow	Mitral Regurgitation Flow	*1
MR Flow Rate	Mitral Regurgitation Flow Rate	*2
MR Fraction	Mitral Valve Regurgitation Fraction	*3
MR EROA	Mitral Valve Effective Regurgitant Orifice Area	*4

*1 Means:

$$MR\ Flow(ml) = \frac{2\pi MR\ Rad(cm)^2 \times MR\ Als\ Vel(cm/s)}{|MRV\ max\ (cm/s)|} \times |MR\ VTI(cm)|$$

*2 Means:

$$MR\ Flow\ Rate(ml/s) = 2\pi\ MR\ Rad(cm)^2 \times MR\ Als\ Vel(cm/s)$$

*3 Means:

$$MR\ Fraction\ (no\ unit) = \frac{MR\ Flow(ml)}{MV\ SV(ml)} \times 100\%$$

*4 Means:

$$MR\ EROA(cm)^2 = \frac{2\pi MR\ Rad(cm)^2 \times MR\ Als\ Vel(cm/s)}{|MR\ Vmax(cm/s)|}$$

PISA AR

NOTE : Only applicable for Color and Doppler modes.

Measurement and study	Description	Method and Formula
AR Rad	Aortic Valve Stenosis Radius	PISA measurement
AR VTI	Aortic Valve Regurgitation Velocity-Time Integral	D Trace in Doppler General Measurements
AR Als Vel	Aortic Valve Regurgitation Aliasing Peak Velocity	You can select to use top aliasing velocity or bottom aliasing velocity or input the value directly.
AR Vmax	Aortic Regurgitation Peak Velocity	Obtained from AR VTI measurement
AR Flow	Aortic Regurgitation Flow	*1
AR Flow Rate	Aortic Regurgitation Flow Rate	*2
AR Fraction	Aortic Valve Regurgitation Fraction	*3
AR EROA	Aortic Valve Effective Regurgitant Orifice Area	*4

*1 Means:

$$AR\ Flow(ml) = \frac{2\pi AR\ Rad(cm)^2 \times AR\ Als\ Vel(cm/s)}{|ARV\ max\ (cm/s)|} \times |AR\ VTI(cm)|$$

*2 Means:

$$AR\ Flow\ Rate(ml/s) = 2\pi\ AR\ Rad(cm)^2 \times AR\ Als\ Vel(cm/s)$$

*3 Means:

$$AR\ Fraction\ (no\ unit) = \frac{AR\ Flow(ml)}{AV\ SV(ml)} \times 100\%$$

*4 Means:

$$AR\ EROA(cm)^2 = \frac{2\pi AR\ Rad(cm)^2 \times AR\ Als\ Vel(cm/s)}{|AR\ Vmax(cm/s)|}$$

PISA TR

NOTE : Only applicable for Color and Doppler modes.

Measurement and study	Description	Method and Formula
TR Rad	Tricuspid Valve Stenosis Radius	PISA measurement
TR VTI	Tricuspid Valve Regurgitation Velocity-Time Integral	D Trace in Doppler General Measurements
TR Als Vel	Tricuspid Valve Regurgitation Aliasing Peak Velocity	You can select to use top aliasing velocity or bottom aliasing velocity or input the value directly.
TR Vmax	Tricuspid Regurgitation Peak	Obtained from TR VTI measurement

Measurement and study	Description	Method and Formula
	Velocity	
TR Flow	Tricuspid Regurgitation Flow	*1
TR Flow Rate	Tricuspid Regurgitation Flow Rate	*2
TR Fraction	Tricuspid Valve Regurgitation Fraction	*3
TR EROA	Tricuspid Valve Effective Regurgitant Orifice Area	*4

*1 Means:

$$TR\ Flow(ml) = \frac{2\pi TR\ Rad(cm)^2 \times TR\ Als\ Vel(cm/s)}{|TRV\ max\ (cm/s)|} \times |TR\ VTI(cm)|$$

*2 Means:

$$TR\ Flow\ Rate(ml/s) = 2\pi\ TR\ Rad(cm)^2 \times TR\ Als\ Vel(cm/s)$$

*3 Means:

$$TR\ Fraction\ (no\ unit) = \frac{TR\ Flow(ml)}{TV\ SV(ml)} \times 100\%$$

*4 Means:

$$TR\ EROA(cm)^2 = \frac{2\pi TR\ Rad(cm)^2 \times TR\ Als\ Vel(cm/s)}{|TR\ Vmax(cm/s)|}$$

PISA PR

NOTE : Only applicable for Color and Doppler modes.

Measurement and study	Description	Method and Formula
PR Rad	Pulmonary Valve Stenosis Radius	PISA measurement
PR VTI	Pulmonary Valve Regurgitation Velocity-Time Integral	D Trace in Doppler General Measurements
PR Als Vel	Pulmonary Valve Regurgitation Aliasing Peak Velocity	You can select to use top aliasing velocity or bottom aliasing velocity or input the value directly.
PR Vmax	Pulmonary Regurgitation Peak Velocity	Obtained from PR VTI measurement
PR Flow	Pulmonary Regurgitation Flow	*1
PR Flow Rate	Pulmonary Regurgitation Flow Rate	*2
PR Fraction	Pulmonary Valve Regurgitation Fraction	*3

Measurement and study	Description	Method and Formula
PR EROA	Pulmonary Valve Effective Regurgitant Orifice Area	*4

*1 Means:

$$PR\ Flow(ml) = \frac{2\pi PR\ Rad(cm)^2 \times PR\ Als\ Vel(cm/s)}{|PRV\ max\ (cm/s)|} \times |PR\ VTI(cm)|$$

*2 Means:

$$PR\ Flow\ Rate(ml/s) = 2\pi\ PR\ Rad(cm)^2 \times PR\ Als\ Vel(cm/s)$$

*3 Means:

$$PR\ Fraction\ (no\ unit) = \frac{PR\ Flow(ml)}{PV\ SV(ml)} \times 100\%$$

*4 Means:

$$PR\ EROA(cm)^2 = \frac{2\pi PR\ Rad(cm)^2 \times PR\ Als\ Vel(cm/s)}{|PR\ Vmax(cm/s)|}$$

- **TDI**

Measurement and study	Description	Method and Formula
Med E'/A'	MV medial E-Vel/ A-Vel	$\text{Med E}'/\text{A}'(no\ unit) = \frac{Med\ E'\ Vel}{Med\ A'\ Vel}$
Med Acc Time	MV medial E-wave Acceleration Time	Obtained from Med A-Rate measurements
Med Dec Time	MV medial E-wave Deceleration Time	Obtained from Med D-Rate measurements
Lat E'/A'	MV lateral E-Vel/ A-Vel	$\text{Lat E}'/\text{A}'(no\ unit) = \frac{Lat\ E'\ Vel}{Lat\ A'\ Vel}$
Lat Acc Time	MV lateral E-wave Acceleration Time	Obtained from Lat A-Rate measurement
Lat Dec Time	MV lateral E-wave Deceleration Time	Obtained from Lat D-Rate measurement
Med E/E'	Used to assess left ventricular diastolic function	$\text{Med E}/\text{E}'(no\ unit) = \frac{MV\ E\ Vel}{Med\ E'\ Vel}$
Lat E/E'	Used to assess left ventricular diastolic function	$\text{Lat E}/\text{E}'(no\ unit) = \frac{MV\ E\ Vel}{Lat\ E'\ Vel}$

- **MV ALL**

Measure M wave of mitral valve anterior leaflet.

The measurement items are shown in the table below:

Measurement and study	Description
MV D Point	End of systolic, immediately before the opening of the Mitral Valve.
MV E Point	The anterior leaflet of the mitral valve opens, it peaks at E.
MV F Point	Lowest point of the initial diastolic closing.
MV A Point	In atria systole, blood is propelled through the mitral orifice and the mitral leaflets reopen. The peak of this phase of mitral valve motion is indicated as A.
MV C Point	Complete closure occurs after the onset of the ventricular systole.

The measurement results are shown in the table below:

Measurement and study	Description	Method and Formula
MV E Amp	Amplitude of the Mitral Valve E wave to C point	Distance in M General Measurements
MV D-E Amp	Amplitude of the Mitral Valve D point to E point	Distance in M General Measurements
MV D-E Slope	Slope of the Mitral Valve D point to E point	Slope in M General Measurements
MV E-F Slope	Slope of the Mitral Valve E point to F point	Slope in M General Measurements
MV A Amp	Amplitude of the Mitral Valve A wave to C point	Distance in M General Measurements
MV A-C Interval	Time interval between the A point and the C point	Time in M General Measurements

Perform the following steps:

1. Select **[MV ALL]** in the measurement menu.
2. Roll the trackball to move the cursor, press the **[Set]** button to fix points D, E, F, A and C in turn. Corresponding character symbol will display at the right side of the point.
3. After D point and E point are fixed, MV D-E Amp and MV D-E Slope values are acquired.
4. MV E-F Slope value is acquired by fixing F point.
5. MV E Amp, MV A Amp and MV A-C Interval values are acquired by fixing A point and C point.

    - You can end measurement in advance by pressing the **[Set]** button twice on point E, F, A or C.

➢ Auto EF

Auto EF (automated ejection fraction) is used to automatically measure the systole and diastole planes of the left ventricle to evaluate its diastolic function.

NOTE:
- **Auto EF is available only for adult cardiac exams.**
- **A minimum of 80 image frames is required to use Auto EF.**

Item	Description
EDV	End-diastolic Left Ventricular Volume
ESV	End-systolic Left Ventricular Volume
SV	Stroke Volume
EF	Ejection Fraction

1. Select **[Auto EF]** in the measurement menu.
2. In apical view, measure left ventricular endocardium at end-diastolic and left ventricular endocardium at end-systolic:
   - The system automatically recognizes end-diastole and end-systole of the left ventricle, and calculate the EDV, ESV, SV, and EF.
   - The image is split into left and right windows, showing diastolic and systolic frames. These frames can be manually adjusted by rotating the knobs under **[Diastolic Frame]** and **[Systolic Frame]**.
3. Adjust the endocardium tracing line as needed using the trackball and the **[Set]** button.
4. Press the **[Set]** button to end the measurement.
5. Press the **[Caliper]**/**[Measure]**/**[B]** button on the control panel to exit Auto EF measurement.

➢ Zola AI

The system automatically identifies standard cardiac views, measures key parameters, compares them to normal values, highlights abnormalities, and generates a risk alert in the report.

NOTE:
- **Available only for cat and dog exams using phased probes.**
- **Available only for single-window mode in frozen or cine replay state.**
- **Enter the appropriate imaging mode and acquire standard cardiac views for the desired measurement.**

The correlation between imaging modes, standard views, and measurement items are shown in the table below.

Imaging Mode	Measurement and study	Description	Method and Formula
B	LVSId(A4C)	Left Ventricular Sphericity Index at end-diastole (apical 4-chamber view)	$LVSId(No\ unit) = LVLd(cm)/LVIDd(cm)$

Imaging Mode	Measurement and study	Description	Method and Formula
B	LVSId(LA4C)	Left Ventricular Sphericity Index at end-diastole (long-axis four-chamber view)	$LVSId(No\ unit) = LVLd(cm)/LVIDd(cm)$
B	LA/Ao	Left Atrium Diameter/Aorta Diameter	$LA/Ao\ (no\ unit) = LA\ Diam(cm)/Ao\ Diam(cm)$
M	MV EPSS	Distance between point E and Interventricular Septum when Mitral Valve is fully open	Distance in M General Measurements
M	LV(M)	Left Ventricular Function (M)	See “Cube”, “Teichholz”, “Gibson”
CW	dP/dt(Doppler)	Rate of Pressure change (Doppler)	$dP/dt(mmHg/s) = 32/\Delta t$

1. Select the probe and exam mode.
2. Scan and acquire standard cardiac images.
3. Press **[Freeze]** to freeze the image, then press **[Measure]**. Select **[Zola AI]** in the measurement menu.
4. Select the desired measurement item.
   - The system automatically detects the cardiac view and displays the measurement result, up/down arrows for out-of-range values, and clinical significance.
   - To measure manually, rotate the knob under **[Method]** and select **[Manual]**.
   - If no standard view is detected, a prompt appears and the system switches to manual measurement.
5. Hide indicators and segmented areas, and set the measurement cycle on the touchscreen as needed.
   - Tap **[Indicators]** to display/hide indicators.
   - Tap **[Area Display]** to display/hide segmented regions. (for LVSId(A4C), LVSId(LA4C), LA/Ao)
   - Tap **[Single Cycle]** or **[Full Cycle]** to select the measurement cycle. With Single Cycle, tap **[Prev Cycle]** / **[Next Cycle]** to switch cycles. (for MV EPSS, LV(M), dP/dt(Doppler))
6. Edit identified views and measurement results as needed.
   - Use the trackball to position the cursor, press the **[Set]** button to select the reference point, move the trackball to adjust as needed, then press **[Update]** to switch to the next point.
   - For LV(M) measurement, rotate the knob under **[Calc Method]** to select the measurement formula: Teichholz, Cube, or Gibson.

7. Press the **[Set]** button to end the measurement.
   - After measurement, results are added to the report automatically.
   - Switching to manual measurement clears automatic results.
8. Press the **[Caliper]** or **[Measure]** o**r [B]** button on the control panel to exit Zola AI measurement.

8.3.4 Small Parts

8.3.4.1 2D Mode

The measurement items, calculation items and measurement method for 2D small parts measurement are shown in the table below.

Table 37 2D Small Parts Measurement

Items	Description	Methods or Formula
Thyroid L	Thyroid Length	See “8.2.1.1 Distance (2D)”
Thyroid H	Thyroid Height	See “8.2.1.1 Distance (2D)”
Thyroid W	Thyroid Width	See “8.2.1.1 Distance (2D)”
Isthmus H	Isthmus Height	See “8.2.1.1 Distance (2D)”
Testicular L	Testicular Length	See “8.2.1.1 Distance (2D)”
Testicular H	Testicular Height	See “8.2.1.1 Distance (2D)”
Testicular W	Testicular Width	See “8.2.1.1 Distance (2D)”
Testicular Mass1 d1~3	Testicular Mass diameter1	See “8.2.1.1 Distance (2D)”
Testicular Mass2 d1~3	Testicular Mass diameter2	See “8.2.1.1 Distance (2D)”
Testicular Mass3 d1~3	Testicular Mass diameter3	See “8.2.1.1 Distance (2D)”
Epididymis L	Epididymis Length	See “8.2.1.1 Distance (2D)”
Epididymis W	Epididymis Width	See “8.2.1.1 Distance (2D)”
Epididymis H	Epididymis Height	See “8.2.1.1 Distance (2D)”
Scrotal Wall	Scrotal Wall Thickness	See “8.2.1.1 Distance (2D)”
Breast Mass 1~6 L	Breast Mass Length	See “8.2.1.1 Distance (2D)”
Breast Mass 1~6 W	Breast Mass Height	See “8.2.1.1 Distance (2D)”
Breast Mass 1~6 H	Breast Mass Width	See “8.2.1.1 Distance (2D)”
Nip.-Mass 1~6 Dist.	Distance between nipple and mass	See “8.2.1.1 Distance (2D)”
Skin-Mass 1~6 Dist.	Distance between skin and	See “8.2.1.1 Distance (2D)”

Items	Description	Methods or Formula
	mass	
Thyroid Mass 1~3 d1	Thyroid Mass diameter1	See “8.2.1.1 Distance (2D)”
Thyroid Mass 1~3 d2	Thyroid Mass diameter2	See “8.2.1.1 Distance (2D)”
Thyroid Mass 1~3 d3	Thyroid Mass diameter3	See “8.2.1.1 Distance (2D)”
Thyroid Vol	Thyroid Volume	See “8.3.4.3 Small Parts Study and Calculation”

8.3.4.2 Doppler Mode

Items	Description	Methods or Formula
SAT	Superior Thyroid Artery	See “8.2.3.5 D Trace”
ITA	Inferior Thyroid Artery	See “8.2.3.5 D Trace”
Testis A	Testis Artery	See “8.2.3.5 D Trace”
Testis V	Testis Vein	See “8.2.3.5 D Trace”
Epididymis A	Epididymis Artery	See “8.2.3.5 D Trace”
Epididymis V	Epididymis Vein	See “8.2.3.5 D Trace”

8.3.4.3 Small Parts Study and Calculation

Items	Description	Methods or Formula
Thyroid Vol	Thyroid Volume	Measure Thyroid L, Thyroid W and Thyroid H, system then automatically calculates Thyroid Vol.
Testicular Vol	Testicular Volume	Measure Testicular L, Testicular W and Testicular H, system then automatically calculates Testicular Vol.

8.3.5 Vascular

8.3.5.1 2D Vascular Measurement

Table 38 2D Vascular Measurement

Items	Description	Subitems	Methods or Formula
IMT	Intima-Media Thickness	CCA IMT	See “8.3.5.3 Vascular Study and Calculation”
		Bulb IMT	See “8.3.5.3 Vascular Study and Calculation”
		ICA IMT	See “8.3.5.3 Vascular Study and Calculation”
		ECA IMT	See “8.3.5.3 Vascular Study and Calculation”

Items	Description	Subitems	Methods or Formula
CCA	Common Carotid Artery	Outer Diameter	See “8.2.1.1 Distance (2D)”
		Inner Diameter	See “8.2.1.1 Distance (2D)”
		Outer Area	See “8.2.1.2 Area & Circumference”
		Inner Area	See “8.2.1.2 Area & Circumference”
Bulb	Bulbillate	Outer Diameter	See “8.2.1.1 Distance (2D)”
		Inner Diameter	See “8.2.1.1 Distance (2D)”
		Outer Area	See “8.2.1.2 Area & Circumference”
		Inner Area	See “8.2.1.2 Area & Circumference”
Carotid Bifurcation	/	Outer Diameter	See “8.2.1.1 Distance (2D)”
		Inner Diameter	See “8.2.1.1 Distance (2D)”
		Outer Area	See “8.2.1.2 Area & Circumference”
		Inner Area	See “8.2.1.2 Area & Circumference”
ICA	Internal Carotid Artery	Outer Diameter	See “8.2.1.1 Distance (2D)”
		Inner Diameter	See “8.2.1.1 Distance (2D)”
		Outer Area	See “8.2.1.2 Area & Circumference”
		Inner Area	See “8.2.1.2 Area & Circumference”
ECA	External Carotid Artery	Outer Diameter	See “8.2.1.1 Distance (2D)”
		Inner Diameter	See “8.2.1.1 Distance (2D)”
		Outer Area	See “8.2.1.2 Area & Circumference”
		Inner Area	See “8.2.1.2 Area & Circumference”
Carotid Stenosis 1-4	/	Outer Diameter	See “8.2.1.1 Distance (2D)”
		Inner Diameter	See “8.2.1.1 Distance (2D)”
		Outer Area	See “8.2.1.2 Area & Circumference”
		Inner Area	See “8.2.1.2 Area & Circumference”
C.Iliac A	Common Iliac Artery	Outer Diameter	See “8.2.1.1 Distance (2D)”
		Inner Diameter	See “8.2.1.1 Distance (2D)”
		Outer Area	See “8.2.1.2 Area & Circumference”
		Inner Area	See “8.2.1.2 Area & Circumference”

Items	Description	Subitems	Methods or Formula
Ex. Iliac A	External Iliac Artery	Outer Diameter	See “8.2.1.1 Distance (2D)”
		Inner Diameter	See “8.2.1.1 Distance (2D)”
		Outer Area	See “8.2.1.2 Area & Circumference”
		Inner Area	See “8.2.1.2 Area & Circumference”
IIA	Internal Iliac Artery	Outer Diameter	See “8.2.1.1 Distance (2D)”
		Inner Diameter	See “8.2.1.1 Distance (2D)”
		Outer Area	See “8.2.1.2 Area & Circumference”
		Inner Area	See “8.2.1.2 Area & Circumference”
CFA	Common Femoral Artery	Outer Diameter	See “8.2.1.1 Distance (2D)”
		Inner Diameter	See “8.2.1.1 Distance (2D)”
		Outer Area	See “8.2.1.2 Area & Circumference”
		Inner Area	See “8.2.1.2 Area & Circumference”
DFA	Deep Femoral Artery	Outer Diameter	See “8.2.1.1 Distance (2D)”
		Inner Diameter	See “8.2.1.1 Distance (2D)”
		Outer Area	See “8.2.1.2 Area & Circumference”
		Inner Area	See “8.2.1.2 Area & Circumference”
Int Jug V	Internal Jugular Vein	Anterior-Posterior	See “8.2.1.1 Distance (2D)”
		Transverse	See “8.2.1.1 Distance (2D)”
		Checklist	/
C.Iliac V	Common Iliac Vein	Anterior-Posterior	See “8.2.1.1 Distance (2D)”
		Transverse	See “8.2.1.1 Distance (2D)”
		Checklist	/
Ex. Iliac V	External Iliac Vein	Anterior-Posterior	See “8.2.1.1 Distance (2D)”
		Transverse	See “8.2.1.1 Distance (2D)”
		Checklist	/
IIV	Internal Iliac Vein	Anterior-Posterior	See “8.2.1.1 Distance (2D)”
		Transverse	See “8.2.1.1 Distance (2D)”
		Checklist	/

Items	Description	Subitems	Methods or Formula
CFV	Common Femoral Vein	Anterior-Posterior	See “8.2.1.1 Distance (2D)”
		Transverse	See “8.2.1.1 Distance (2D)”
		Checklist	/
DFV	Deep Femoral Vein	Anterior-Posterior	See “8.2.1.1 Distance (2D)”
		Transverse	See “8.2.1.1 Distance (2D)”
		Checklist	/

8.3.5.2 Doppler Vascular Measurement

Table 39 Doppler Vascular Measurement

Items	Description	Subitems	Methods or Formula
Carotid	/	CCA	See “8.2.3.5 D Trace”
		ICA	See “8.2.3.5 D Trace”
		ECA	See “8.2.3.5 D Trace”
		Bulb	See “8.2.3.5 D Trace”
		Carotid Bifurcation	See “8.2.3.5 D Trace”
Lower Extremity Artery	/	C.Iliac A	See “8.2.3.5 D Trace”
		Ex.Iliac A	See “8.2.3.5 D Trace”
		IIA	See “8.2.3.5 D Trace”
		CFA	See “8.2.3.5 D Trace”
		DFA	See “8.2.3.5 D Trace”
CCA (Sten)	Common Carotid Artery (Stenosis)	Pre Sten	See “8.2.3.5 D Trace”
		Sten	See “8.2.3.5 D Trace”
		Post Sten	See “8.2.3.5 D Trace”
ICA (Sten)	Internal Carotid Artery (Stenosis)	Pre Sten	See “8.2.3.5 D Trace”
		Sten	See “8.2.3.5 D Trace”
		Post Sten	See “8.2.3.5 D Trace”
ECA (Sten)	External Carotid Artery (Stenosis)	Pre Sten	See “8.2.3.5 D Trace”
		Sten	See “8.2.3.5 D Trace”
		Post Sten	See “8.2.3.5 D Trace”

Items	Description	Subitems	Methods or Formula
Bulb (Sten)	Bulbillate (Stenosis)	Pre Sten	See “8.2.3.5 D Trace”
		Sten	See “8.2.3.5 D Trace”
		Post Sten	See “8.2.3.5 D Trace”
Carotid Bifurcation (Sten)	Carotid Bifurcation (Stenosis)	Pre Sten	See “8.2.3.5 D Trace”
		Sten	See “8.2.3.5 D Trace”
		Post Sten	See “8.2.3.5 D Trace”
Carotid Stenosis 1-4	/	Pre Sten	See “8.2.3.5 D Trace”
		Sten	See “8.2.3.5 D Trace”
		Post Sten	See “8.2.3.5 D Trace”
C.Iliac A (Sten)	Common Iliac Artery (Stenosis)	Pre Sten	See “8.2.3.5 D Trace”
		Sten	See “8.2.3.5 D Trace”
		Post Sten	See “8.2.3.5 D Trace”
Ex.Iliac A (Sten)	External Iliac Artery (Stenosis)	Pre Sten	See “8.2.3.5 D Trace”
		Sten	See “8.2.3.5 D Trace”
		Post Sten	See “8.2.3.5 D Trace”
IIA (Sten)	Internal Iliac Arter (Stenosis)	Pre Sten	See “8.2.3.5 D Trace”
		Sten	See “8.2.3.5 D Trace”
		Post Sten	See “8.2.3.5 D Trace”
CFA (Sten)	Common Femoral Artery (Stenosis)	Pre Sten	See “8.2.3.5 D Trace”
		Sten	See “8.2.3.5 D Trace”
		Post Sten	See “8.2.3.5 D Trace”
DFA (Sten)	Deep Femoral Artery (Stenosis)	Pre Sten	See “8.2.3.5 D Trace”
		Sten	See “8.2.3.5 D Trace”
		Post Sten	See “8.2.3.5 D Trace”
C.Iliac V	Common Iliac Vein	PV	See “8.2.3.5 D Trace”
		Reflux	See “8.2.3.3 Time (Doppler)”
		Checklist	/
Ex.Iliac V	External Iliac	PV	See “8.2.3.5 D Trace”

Items	Description	Subitems	Methods or Formula
	Vein	Reflux	See “8.2.3.3 Time (Doppler)”
		Checklist	/
IIV	Internal Iliac Vein	PV	See “8.2.3.5 D Trace”
		Reflux	See “8.2.3.3 Time (Doppler)”
		Checklist	/
CFV	Common Femoral Vein	PV	See “8.2.3.5 D Trace”
		Reflux	See “8.2.3.3 Time (Doppler)”
		Checklist	/
DFV	Deep Femoral Vein	PV	See “8.2.3.5 D Trace”
		Reflux	See “8.2.3.3 Time (Doppler)”
		Checklist	/

8.3.5.3 Vascular Study and Calculation

➢ **IMT**

IMT (Intima-Media Thickness) refers to the vertical dimension between LI (Lumen-Intima) and MA (Media-Adventia).

Perform the following steps:

1. In 2D mode, press the **[Caliper]** button on the control panel to start measurement.
2. Click **[IMT(NEAR)]** or **[IMT(FAR)]** in the measurement menu and the ROI box appears.
3. Move the cursor to the start point of ROI and then press the **[Set]** button. Roll the trackball to adjust the ROI area and then press the **[Set]** button. Two auto trace lines appear in the ROI box. Results are displayed in the result window.

NOTE:
- **Please freeze the image before starting IMT measurement.**
- **Make sure that you select the right vessel wall (Near/ Far) before IMT measurement; otherwise wrong calculation may result.**

➢ **Stenosis D**

Measure Normal Diam and Resid Diam, calculate Stenosis D.

$$Stenosis\ D = (D_1 - D_2)/D_1 \times 100\%$$

Where D_1 is Normal Diam and D_2 is Resid Diam.

➢ **Stenosis A**

Measure Normal Area and Resid Area, calculate Stenosis A.

$$Stenosis\ A = (A_1 - A_2)/A_1 \times 100\%$$

Where A_1 is Normal Area and A_2 is Resid Area.

- **ICA/CCA(PS)**

Measure the flow velocity ratio between ICA and CCA to calculate the stenosis.

Measure PS value of ICA and CCA distal by D trace method of Doppler general measurement, and the system automatically calculates the stenosis.

- **ABI**

Measure the Ankle Systolic Pressure (ASP) and Brachial Systolic Pressure (BSP) on Doppler image to calculate Ankle Brachial Index (ABI).

$$ABI = ASP/BSP$$

Chapter 9 Report

After the measurement is completed, the relevant measurement data will be displayed in the report.

9.1 View the Report

Press the **[Report]** on the control panel to enter the report screen of current animal.

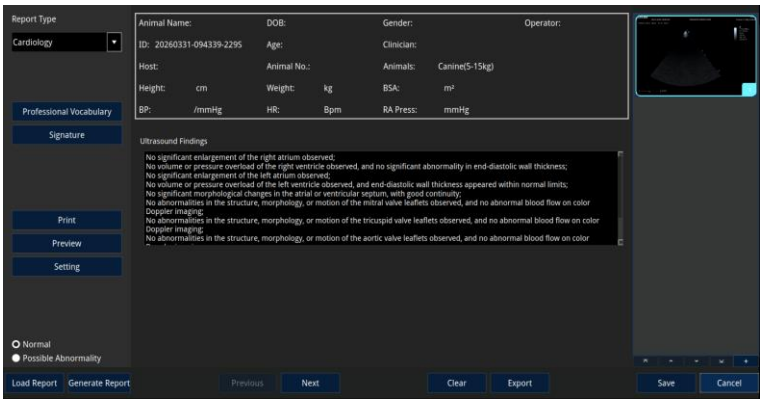

Figure 45 Report

NOTE:

- **The report shows the three latest values and a final value for the measurement.**
- **The report only displays the measurement data displayed by default for the corresponding template.**
- **General report only displays the caliper measurement data.**

Table 40 Button Functions

Item	Description
Load Report	Click to load all generated reports under the current exam.
Generate Report	Click to generate the current report in PDF.
Previous/ Next	Click **[Previous]** or **[Next]** to flip the pages if the report has more than one page.
Export	Click to open the Export Wizard.
Clear	Click to delete comments.
Professional Vocabulary	Click to open the professional vocabulary and easily add ultrasound comments
Signature	Click to open the touchscreen signature box and enter your handwritten signature.
Print	Click to print the current report
Preview	Click to preview the current report

Item	Description
Setting	Click to open the print Setting Dialog box
Normal	Mark this report as normal
Possible Abnormalities	Mark this report as possible abnormalities
Add Image	Check the thumbnail in the Clipboard to add image
Save	Click to save current setting and return to the Home screen
Cancel	Click to cancel all modifications and return to the Home screen
∧/∨	Click to go to the previous/next page
⤒/⤓	Click to go to the first/last page
+	Click to open the image gallery

9.2 Edit the Report

9.2.1 Edit the Measurement Data

CAUTION: **Incorrect data may cause misdiagnosis. Please modify the measurement data carefully.**

NOTE:

- **Only measurement results can be edited; calculation results cannot be edited.**
- **Once the measurement result is modified, the average value and the corresponding calculated value will automatically update.**

Perform the following steps:

1. After the measurement is completed, press **[Report]** on the control panel to enter the Report screen. The corresponding report of current exam displays.
2. To view other animal reports, click the **[Report Type]** drop-down box to select the corresponding report.
3. Click the **[Method]** drop-down box to set the method for calculating the final value. The value is updated and displayed according to the calculation formula selected.

Item	Description
Last	Display the latest value of the measurement
Avg	Display the average value of the measurement
Max	Display the maximum value of the measurement
Min	Display the minimum value of the measurement

4. Move the cursor to the value you want to edit and press the **[Set]** button.
5. Delete the value via **<Back>** key on the keyboard and enter the new value.
6. After editing, click **[Save]** to save the modification and return to the Home screen.

9.2.2 Add Comments

Enter ultrasound comments in the **[Ultrasound Findings]** or **[Ultrasound Indication]** text box.

NOTE: The comment box is at the bottom of the report page. For reports with more than one page, please click [Next] to view the comments.

Click **[Professional Vocabulary]** to add ultrasound comments through vocabulary, templates, and measurement results.

9.2.3 Add Image

Images saved in the current exam can be added to the report.

Perform the following steps:

1. Click **[+]** to open the Image gallery. The column on the left displays the alternative ultrasonic images and the list on the right displays the selected ultrasonic images.
2. Add or remove Images.

Operation	Description
Add Image	1) Select the image you want to add from the left column. 2) Click **[>]** to add the selected image of the left column to the right column (double-click an image of the left column can also add it to the right column). Or Click **[>>]** to add all the selected images of the left column to the right column.
Remove Image	1) Select the image you want to add from the left column. 2) Click **[<]** to remove the selected images from the right column to the left column (double-click an image of the right column can also remove it to the left column). Or Click **[<<]** to remove all the selected images from the right column to the left column.

9.3 Preview the Report

Click **[Preview]** to preview the report. Click **[Signature]** to enter your handwritten signature.

9.4 Print the Report

Click **[Print]** to print the report.

NOTE: Add the printer service prior to printing the report.

9.5 Back up the Report

NOTE: Generate the report prior to loading or exporting the report.

9.5.1 Generate

Click **[Generate Report]** to generate the current report.

9.5.2 Load

Click **[Load Report]** to load all generated reports under the current exam.

9.5.3 Export

1. Click **[Export]** to open the Export Wizard and set relevant parameters.
2. Click the **[Drive]** drop-down box to select the report export location.
3. Click the **[Type]** drop-down box to select the format of the exported report.
4. Select the directory where you want to export the report. You can also create or rename a new directory as needed.

Operation	Description
New	Create a new directory.
Rename	Rename the selected directory.

5. Click **[OK]** to export the current report.

Chapter 10 Animal Data Management

After the animal image is acquired and processed, you can store and review the animal image or export the animal data to a USB storage device, drive (compatible format: CDFS) or DICOM server for future viewing.

10.1 Storage

Image and cine are saved to the system by default.

You can also back up data to a removable device or DICOM server. For details, see “10.5 Exporting Image/Data”.

10.1.1 Image Storage

In the freeze or real-time status, press the **[Save 1]** button on the control panel, the system will automatically save the current image to the current animal database. Saved images are displayed as thumbnails on the clipboard.

10.1.1.1 Image Saving Area

The system saves the standard area by default, and you can also set to save the image area. For details, refer to “4.2.3 Image”.

10.1.1.2 Image Saving Button

The **[Save 1]** button on the control panel is set to save a single frame image by default.

You can also define new button for image saving as needed. For details, refer to “4.2.5 Customize”.

10.1.2 Cine Storage

In the freeze or real-time status, press the **[Save2]** button on the control panel, the system will automatically save the cine to the current animal database.

10.1.2.1 Cine Length

For details, refer to “4.2.3 Image”.

10.1.2.2 Cine Saving Button

The **[Save 2]** button on the control panel is set to save cine by default. You can also define new button for cine saving as needed. For details, refer to “4.2.5 Customize”.

10.2 Image Viewing

Previous animal images/data can be viewed through the Station screen, and current animal images and data can also be viewed through other screens.

10.2.1 Current Animal

Images and cines of the current animal can be viewed through the clipboard, review screen, and Station screen.

10.2.1.1 Through Clipboard

1. In the real-time or frozen status, press the **[Cursor]** button on the control panel to display cursor.
2. Locate the desired image / cine by clicking corresponding keys of the clipboard.
   - Click ⌄ / ⌃ to scroll up and down the pages of the thumbnail images.
   - Click ■ / ■■ to switch the display format between single window and dual window.
3. Roll the trackball, move the cursor to the desired thumbnail, double-click the **[Set]** button, and the screen displays the image in original size. To view cine, double-click the desired thumbnail to enter the cine replay status, the user can manually play the cine or play the cine automatically.
   - While viewing the image, replay, zooming, measurements are also available.
   - Press the **<↑>** / **<↓>** keys on the keyboard to scroll through the images and cines displayed in the image area.
   - Press the **[Freeze]** button on the control panel to freeze the image and return to the Home screen.

10.2.1.2 Though Station Screen

1. Press the **<Station>** key on the keyboard to enter the Station screen. The current animal is selected by default in the animal information list, and the clipboard displays the thumbnail image of the animal.

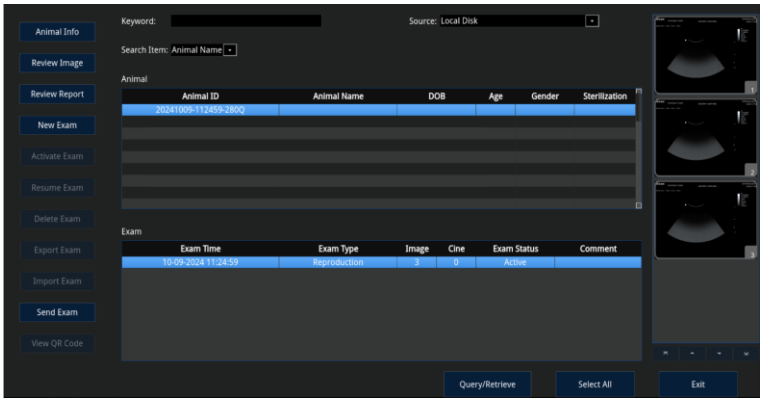

Figure 46 Station Screen

2. Move the cursor to the desired thumbnail image and double-click the **[Set]** button to enter the Home screen to view the image in original size.

10.2.1.3 Through Review Screen

1. Press the **<Station>** key on the keyboard to enter the Station screen. And then click **[Review Image]** to enter the Review screen of current animal.
   - You can also customize a user-defined button for entering the Review screen. For details, refer to “4.2.5 Customize”.

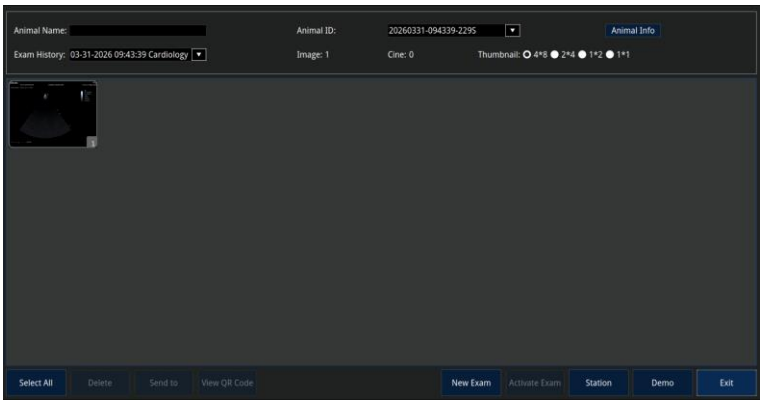

Figure 47 Review Screen

2. Roll the trackball, move the cursor to the desired thumbnail, double-click the **[Set]** button, and the screen displays the image in original size.

10.2.2 Previous Animals

To view data of previous the animal through Station screen:

1. Press the **<Station>** key on the keyboard to enter the Station screen.
2. Search for the desired animal.
   - Select the data source and search item, enter the keyword to search for the desired animal.
   - Drop down the scroll bar on the right side of the animal information list to locate the desired animal.
3. Select the desired animal.
   - Move the cursor to the desired animal and double-click the **[Set]** button to enter the review screen to view the data of the animal.

10.2.2.1 Animal Information

Click **[Animal Info]** to enter the Animal screen to check basic information and exam information of desired animal.

10.2.2.2 Image

- The clipboard displays the thumbnail image of the animal. Click ⌃/⌄/⤒/⤓ to

scroll through the thumbnail images, move the cursor to the desired image, and double-click the **[Set]** button to view the image.

- Or click **[Review Image]** to enter the Review screen, move the cursor to the desired image, and double-click the **[Set]** button to view the image.

10.2.2.3 Report

Click **[Review Report]** to view the report.

10.3 Delete Image/Data

10.3.1 Current Animal

10.3.1.1 Delete image through Clipboard

1. Select image.
   - Click ⌄ / ⌃ to scroll up and down the pages of the thumbnail images.
   - Click ■ / ■■ to switch the display format between single window and dual window.
2. Move the cursor on the thumbnail of the image you want to delete and the delete icon " 🗑 " displays.
3. Click " 🗑 " icon to delete the image.

10.3.1.2 Delete image through Station screen

1. Press the **<Station>** key on the keyboard to enter the Station screen.
2. Move the cursor on the thumbnail of the image you want to delete and the delete icon " 🗑 " displays.
   - Click ⌃/⌄/⌅/⌆ to scroll through the thumbnail images.
3. Click " 🗑 "to delete the image.

10.3.1.3 Delete image through Review screen

Perform the following steps:

1. Press the **<Station>** key on the keyboard to enter the Station screen, and then click **[Review Image]** to enter the Review screen.
2. Move the cursor to select one or more thumbnail images.
   - Click" 🗑 " to delete a specific image.
   - Click **[Select All]** to select all images.

3. Click **[Delete]** to delete the selected images.

10.3.2 Previous Animals

Perform the following steps:

1. Press the **<Station>** key on the keyboard to enter the Station screen.
2. Search for desired animal.
   - Select the data source and search item, enter the keyword to search for the desired animal.
3. Select desired animal.
   - Roll the trackball over the desired animal, press the **[Set]** button.
4. Delete animal data.
   - Delete image: move the cursor to the image to be deleted, click " " to delete the image; or click **[Review Image]** to enter the animal screen and delete image.
   - Delete animal data: click **[Delete Exam]**, and then click **[OK]** in the pop-up dialog box to delete the animal data.
   - Delete all animal data: **[Select All]** to select all animals. Click **[Delete Exam]** and then click **[OK]** in the pop-up dialog box to delete all animal data.

10.4 Image/Data Recovery

Deleted animal data will be cached in the recycle bin.

Due to the space limitations of the hard disk, the recycle bin can only cache animal data deleted within the past 30 days.

To recover image/data, please perform the following steps:

1. Click the " " icon in the status bar to enter the recycle bin screen.
2. Select desired animal image or data.
   - Click **[Restore]** to restore the selected image/data.
   - Click **[Restore All]** to restore all images and data.
   - Click **[Delete]** to delete the selected image/data.
   - Click **[Delete All]** to delete all images and data.

10.5 Exporting Image/Data

The system supports exporting animal information, image and report to a USB storage device, drive (compatible format: CDFS) or DICOM server.

NOTE:

- **The data in this system is exported in raw data format or DICOM format with different resolution, so the exported image is not the same as the image seen on the system display.**
- **When connecting to the external media, please check if the status bar displays the corresponding icon. If the icon is not displayed, re-connect the external media.**
- **To ensure data security, please export important data regularly.**

10.5.1 Exporting to USB Storage Device

10.5.1.1 Export Animal Data as a Backup

You can back up animal information, images and reports to USB storage devices for viewing on computers or restoring back to the system.

Perform the following steps:

1. Connect the USB storage device to the system via the USB port and the status bar displays the "  " icon.
2. Press the **<Station>** key on the keyboard to enter the Station screen.
3. Select the animal information you want to export.
   - Select the desired animal: search for the animal information via the search items in the animal list.
   - Select all animals: click **[Select All]**.
4. Click **[Export Exam]** to open the Export Exam dialog box.
5. Set the export parameter.
   1) Click **[Destination]** drop-down box to select export destination.
   2) Check **[Original Format]** or **[DICOM Format]** to select the export format.
      - **Original Format**: to back up animal data in its original format.
      - **Dicom Format**: to back up animal data in Dicom format, for which cine zoom mode, compression mode, and compression ratio can be changed.
   3) Set whether to delete local animal exam information after export.
      - Select **[Delete after exporting]**, and then click **[Delete Exam]** to delete animal data.
      - Select **[Delete after exporting]**, and then click **[Delete Image]** to delete animal image.
6. Click **[Export]** to export exam.

10.5.1.2 Export Animal Data by Sending

Perform the following steps:

1. Connect the USB storage device to the system via the USB port and the status

bar displays the “ ” icon.

2. Send Images/data to a USB storage device via following screens:
   - Move the cursor over the thumbnail you want to send in the Home screen, click “” icon on the image.
   - Press the **<Station>** key on the keyboard to enter the Station screen, and then click **[Review Image]** to enter the Review screen. Select one or more thumbnails and click **[Send to]**, or move the cursor over the thumbnail you want to send and click “” icon on the image.
   - Press the **<Station>** key on the keyboard to enter the Station screen. Select desired animal and click **[Send Exam]** or move the cursor over the thumbnail you want to send, click “” icon on the image.
3. A sending dialog box pops up. Select the destination to send image/data.
   - Select the connected USB storage device in the destination list on the left side of the sending screen and select the specific path on the right side of the screen.
4. Set the export parameters.
   - **[Export Image]**: Check the box to send animal images, then select the image/cine type below.
   - **[Cine Zoom Mode]**: Select the zoom mode for the cines to be sent.
   - **[Export Report]**: Check the box to send animal reports, then select the report type from the drop-down list.
5. Click **[OK]** and the image/data will be sent to the USB storage device.

10.5.1.3 Remove the USB Storage Device

Move the cursor over the “ ” icon, press the **[Set]** button, select the USB storage device to be removed in the pop-up dialog box and click **[OK]** to remove the USB device safely.

10.5.2 Exporting to DVD Disc (Optional)

Perform the following steps:

1. Insert a disc into the DVD drive and the status bar displays the “ ”icon.
2. Press the **<Station>** key on the keyboard to enter the Station screen.
3. Select the animal information you want to export.
   - Select the desired animal: search for the animal information via the search items in the animal list.
   - Select all animals: click **[Select All]**.

4. Click **[Export Exam]** to open the Export Exam dialog box.
5. Set the export parameter. (Setting method is the same as exporting to USB storage device. See “10.5.1.1 Export Animal Data as a Backup” for details.
6. Click **[Export]** to export exam.
7. The recording process bar displays and the disc ejects automatically when recording is complete.
8. Remove the disc.

10.5.3 Exporting to Electronic Device

10.5.3.1 Transfer Animal Data to Electronic Device via Bluetooth

NOTE :
- **Supported OS: Android and HarmonyOS (iOS not supported).**
- **Only images and saved reports can be transferred; cines are transferred as thumbnails.**
- **DO NOT use mass storage devices with Bluetooth.**
- **DO NOT frequently plug and unplug the Bluetooth adapter.**

Perform the following steps:

1. Connect the USB Bluetooth adapter to the system via the USB port and the status bar displays the “ ” icon.
   - Recommended Bluetooth adapters: UGREEN CM109 (CPU: CSR8510, Bluetooth 4.0)
2. Send images/data to a Bluetooth device via the Home, Station, or Review screen.
   - Related operations are similar to sending to USB storage device. See “10.5.1.2 Export Animal Data by Sending” for details.
3. A sending dialog box pops up. Select the destination to send image/data.
   - Select **[Bluetooth]** in the destination list on the left side of the sending screen.
   - Ensure that the Bluetooth function of your electronic device is turned on. Select the desired device's Bluetooth name from the list on the right side of the screen.
4. Set the export parameters.
   - Setting method is similar to sending to USB storage device. See “10.5.1.2 Export Animal Data by Sending” for details.
5. Click **[OK]** and the image/data will be sent to the electronic device.
6. Confirm and view images or reports sent by the system on the electronic device.

10.5.3.2 Transfer Animal Data to Electronic Device via Wi-Fi

Perform the following steps:

1. Connect the USB Wi-Fi adapter to the system via the USB port and the status bar displays the “ ” icon.

- Recommended Wi-Fi adapters: UGREEN CM492, TP-LINK TL-WDN5200H AC650

2. Connect the ultrasound device to the wireless network.

   1) Click the "" icon to enter the Wi-Fi interface.

   2) Double-click the wireless network to be connected, or select it and click **[Connect]**.

      - If the wireless network is encrypted, enter the password in the pop-up password input box and click **[OK]**.
      - To connect to a hidden network, click **[Other network]** and add network in the pop-up window.
      - If the desired network name is in the Wi-Fi list, click **[Refresh]** to retry.
      - The system will attempt to connect. Once connected, the status column will display **[Connected]**.
      - The encryption status column will show the network's encryption status and signal strength.

   3) Click **[Setting]**, and set the working mode for the wireless network.

      - **STA mode**: Set the ultrasound device as a wireless client (Station, STA) to connect to an existing Wi-Fi network.
      - **AP mode**: Set the ultrasound device as a wireless Access Point (AP) to provide Wi-Fi access to other devices.

3. Connect the electronic device to the same network as the ultrasound device.

   - The ultrasound device can be connected to the same wireless network as the electronic device in two ways: STA mode and AP mode.
   - In STA mode, enable Wi-Fi in your electronic device, and look for the same wireless network that the ultrasound device is connected to. Select this network and enter the Wi-Fi password if prompted.
   - In AP mode, the system displays a **[WLAN]** dialog box with the device's Wi-Fi QR code and network name. Scan the QR code with your electronic device to join the network shared by the ultrasound device.

4. Send the animal data to be shared on the electronic device to zStorage.

   1) Send images/data to zStorage via the Home, Station, or Review screen.

      - Related operations are similar to sending to USB storage device. See “10.5.1.2 Export Animal Data by Sending” for details.

   2) A sending dialog box pops up. Select the destination to send image/data.

      - Select **[zStorage]** in the destination list on the left side of the sending screen.

   3) Set the export parameters.

      - Setting method is similar to sending to USB storage device. See “10.5.1.2 Export Animal Data by Sending” for details.

4) Click **[OK]** and the image/data will be sent to zStorage.

- The system displays the **[Task Management]** interface when sending a cine, displaying the sending progress, status, and related information.

5. On the Station screen or Review screen, select the animal data that has been sent to zStorage and click **[View QR Code]**.
6. View and download images/cines or reports by scanning the QR code with a mobile device or by opening the shared link in the device's browser.

10.5.3.3 Transfer Animal Data to Computer via LAN

NOTE: Supported OS: Windows 7/10/11 (iOS not supported).

1. Configure the transfer assistant client on the computer.
   1) Install the software package of the transfer assistant: TransmissionAssistant-setup.exe.
   2) Set the storage path and port, then click **[Start]** to activate the transfer assistant service.
2. Configure the transfer assistant on the ultrasound device, see "4.7.2.1 Configure the Transfer Assistant Service".
3. Send the animal data to be shared on the computer to zLink.
   1) Send images/data to zLink via the Home, Station, or Review screen.
      - Related operations are similar to sending to USB storage device. See "10.5.1.2 Export Animal Data by Sending" for details.
   2) A sending dialog box pops up. Select the destination to send image/data.
      - Select **[zLink]** in the destination list on the left side of the sending screen.
      - In the service list on the right, select the configured service name.
   3) Set the export parameters.
      - **[Export Image]**: Check the box to send animal images, then select the image/cine type below.
      - **[Cine Zoom Mode]**: Select the zoom mode for the cines to be sent.
      - **[Export Report]**: Check the box to send animal reports, then select the report type from the drop-down list.
   4) Click **[OK]** to send.
      - The system displays the **[Task Management]** interface when sending a cine, displaying the sending progress, status, and related information.
4. View the images, videos, and reports that are sent to the storage path set on the computer.

10.5.3.4 One-Click Transfer Image/Cine to Computer via LAN

NOTE : Supported OS: Windows 7/10/11 (iOS not supported).

1. Configure the transfer assistant on the computer and ultrasound device, see "10.5.3.3 Transfer Animal Data to Computer via LAN".
2. Set user-defined buttons for sending animal image/cine to the computer via the LAN, see "4.2.5 Customize" for details.
   - **Save Image and Send to Computer**: Save the single frame image on the ultrasound device and send it synchronously to the default service via transfer assistant.
   - **Save Cine and Send to Computer**: Save the cine on the ultrasound device and send it synchronously to the default service via transfer assistant. The saved cine length is the same as the retrospective cine length set in system preset.
3. Create a new animal and scan images, and then click the user-defined button(s) that you have set.
   - The system displays the **[Task Management]** interface when sending a cine, displaying the sending progress, status, and related information.
4. View the image/cine that has been sent to the storage path set on the computer.

10.5.4 Exporting to DICOM Server

Export animal images to the DICOM server, refer to “11.2.1 DICOM Storage” for details.

10.6 Import Image/Data

The system supports importing animal information, images and reports that have been backed up to USB storage devices or DVD disc back to the system for review.

Perform the following steps:

1. Connect the USB storage device containing the animal data backup to the system via the USB port and the status bar displays the “ ” icon.

   Or, insert the DVD disc containing the animal data backup into the CD/DVD-RW drive and the status bar displays the “ ” icon.

   - For details of backing up animal data, refer to “10.5.1.1 Export Animal Data as a Backup” and “10.5.2 Exporting to DVD Disc (Optional)”.
2. Press the **<Station>** key on the keyboard to enter the Station screen.
3. Click the **[Source]** drop-down box to select the USB storage device connected in Step 1.
4. Select the animal information you want to import.

- Select the desired animal: search for animal information via the search items in the animal list.
- Select all animals: click **[Select All]**.

5. Click **[Import Exam]**.
   - The imported process, status and related information can be viewed by clicking the Task Manager icon "  ".
   - If the import is successful, click the **[Source]** drop-down box and select **[Local Disk]** to view the imported exams in the animal list.

10.7 Disk Space Detection

Display disk space information such as disk capacity, available capacity, and disk usage (occupancy rate).

Place the cursor over the disk icon "" in the status bar to view the disk space information.

10.8 Task Manager

The user can enter the task manager screen to view the status of exam sending, importing, and exporting.

NOTE: The information displayed in Task Manager Screen will be cleared after restarting.

Click the task manager icon "" in the status bar to enter the task manager screen.

10.9 Image Demo

Image demo function is used for demonstration of the images stored. Selected image files are played according to the customized order.

To perform image demonstration:

1. Press the **<Station>** key on the keyboard to enter the Station screen, and then click **[Review Image]** to enter the Review screen. Click **[Demo]** to enter the Demo Screen. Edit the content to be played and make related settings as needed.

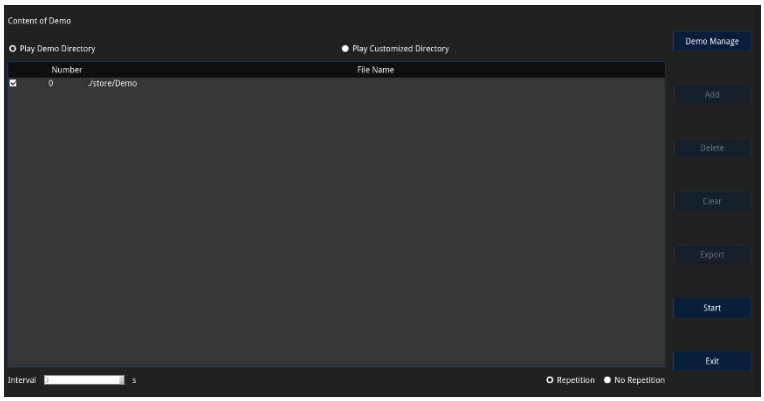

Figure 48 Demo

Table 41 Demo

Item		Description
Content of Demo	**Play Demo Directory**	Demo directory is the folder in hard disk, where the factory DEMO is stored. The system plays the images in this folder when performing demonstration. This directory is managed via **[Demo Manage]**.
	Play Customized Directory	Customized directory stores displayed files. You can add/delete demo images. The system plays the selected images in this folder when performing demonstration.
Demo Manage		Click to enter demo directory management. Click **[>]** to add image to demo directory; Click **[<]** to delete the selected image in demo directory; Click **[<<]** to delete all images in demo directory.
Add file		To add file to the customize directory.
Delete		Delete file in the customize directory.
Clear (Reserved function)		Clear all files in the customize directory.
Export (Reserved function)		Export the selected file to the external storage devices.
Start		Start image demonstration.
Exit		Exit image demonstration.
Interval		Set the demo interval between images.
Repetition / No Repetition		Set whether to repeat the demonstration or exit after a demonstration is completed.

2. Select the directory to be demonstrated, and click **[Start]** to start demonstration.
3. Click **[Exit]** to exit image demo function.

10.10 Zonnet Imaging

Zonnet Imaging supports sending images to a remote server for sharing with other remote users.

CAUTION:

- **For use only by authorized medical institutions and qualified healthcare professionals.**
- **Do not use on unencrypted networks or public Wi-Fi.**

NOTE:

- **When using Zonnet Imaging, ensure the network continuously meets the minimum requirements specified in "Appendix A Technical Specifications". Poor network performance may cause image lag, data loss, or session interruption that could affect diagnosis.**
- **If network issues occur, suspend remote operation and complete the diagnosis locally.**

Chapter 11 DICOM

Digital Imaging and Communications in Medicine (DICOM) Standard is an international normative protocol for communication of medical digital images. DICOM service enables you to:

- Search for animal information archived on the DICOM server (working list) and import animal information to the device for reviewing.
- Send animal information and images on the system to the DICOM storage server.
- Send the image saved on the system to the DICOM print server for image printing.

11.1 DICOM Preset

11.1.1 DICOM Local Preset

Preset the network properties for DICOM server connection.

Enter the DICOM local preset screen via **[Preset]** (press **<Setup>**) → **[Network Preset]** → **[DICOM Local]**.

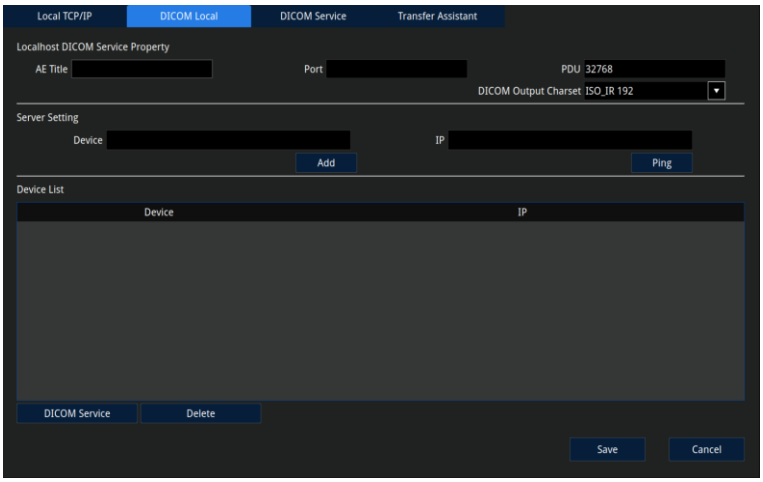

Figure 49 DICOM Local

Table 42 DICOM Local

Item	Description
AE Title	Application Entity (AE) title which is used for device identification. The AE title should be consistent with that of the acceptable SCU preset in the server.
Port	Always the same as the server port.
PDU	The maximum PDU data package size.
Device	Name of the device supporting DICOM services.

Item	Description
IP	IP address of the DICOM server.
DICOM Output Charset	Select a character set for DICOM output according to the local PACS workstation.
Add	Add the server to the server list.
Ping	Check network connectivity between the system and DICOM server.
Device List	Display the added devices.
DICOM Service	Set the DICOM servers. For details, refer to “11.1.2 Service Preset”.
Delete	Remove the selected server from the device list.

To connect to a DICOM server, perform the following steps:

1. Use a network cable to connect the device to the LAN of DICOM server.
2. Set the local network. (Refer to “4.7 Network Preset” for details)
3. Set DICOM server properties.
   - Enter the AE title, port, PDU, device name and IP address.
4. Click **[Add]** to add the server to the device list.
5. Click **[Ping]** to check the connection, the prompt information is displayed in the status bar at the bottom of the screen.
6. Click **[Save]** to save current setting and return to the Home screen.

NOTE: The AE Title should be consistent with the SCU AE Title preset in the server (PACS/RIS/HIS), for example, if the AE Title preset of the printer server is “Printer”, and the SCU AE Title is “Machine”, then the AE Title of local should be “Machine” in the figure above, while the AE Title of the printer server should be “Printer”.

11.1.2 Service Preset

The service preset is mainly used to add or delete DICOM services in a DICOM server, set the service name, port address, and so on.

DICOM service consists of Storage, Print, Worklist, MPPS, Storage Commitment, and Query/Retrieve.

11.1.2.1 Storage

Storage server connection properties and image storage format settings can be found in the Storage Service Preset screen.

Enter the Storage Service Preset screen via **[Preset]** (press **<Setup>**) → **[Network Preset]** → **[DICOM Service]** → **[Storage]**.

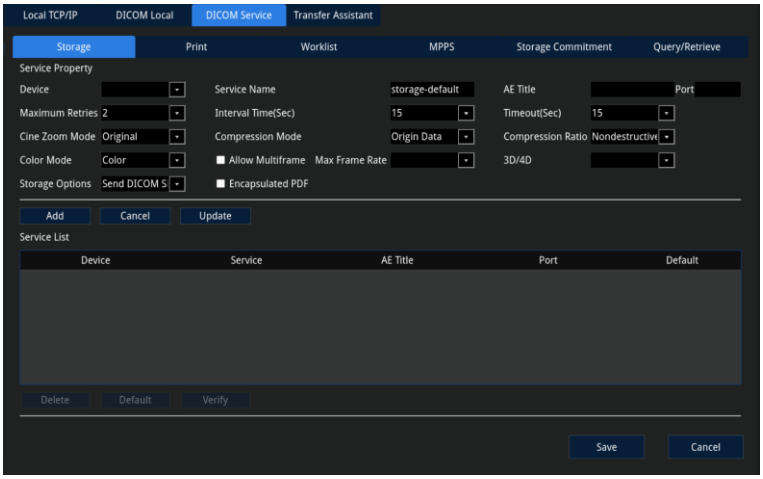

Figure 50 DICOM Service-Storage

Table 43 DICOM Service-Storage

Item	Description
Device	Click the drop-down box to select an added device.
Service Name	Enter a service name. Default is storage-default.
AE Title	Enter the AE title. The AE Title here should be consistent with that of the storage server.
Port	Enter the port number for the storage server.
Maximum Retries	Set the maximum retries.
Interval Time (Sec)	Set the interval time for connection retry.
Timeout (Sec)	Refers to the amount of time after which the system will stop trying to establish a connection to the service.
Cine Zoom Mode	Select the cine zoom mode.
Compression Mode	Select the compression mode.
Compression Ratio	Select the compression ratio.
Color Mode	Select the color mode.
Allow Multiframe	Select if support multi-frame saving.
Max Frame Rate	Set the frame range of transferring cine file into DCM multi-frame file.
3D/4D	Set the 3D/4D image transfer mode. (not applicable)
Storage Options	Enable or disable structured reporting sending.
Encapsulated PDF	Select whether to encapsulate PDF reports in DICOM standard format.
Add	Add a server to the server list.
Cancel	Cancel parameter preset.

Item	Description
Update	Select a server in the service list, change the parameters and click **[Update]** to update the parameters of the server.
Service List	Display the connected storage server list.
Delete	Remove the selected server from the device list
Default	Select an item in the server list as the default server, and the default server is marked with a "Y".
Verify	Verify the network connectivity between the system and storage server.

NOTE: Some DICOM storage features are currently reserved and unavailable. These include Maximum Retries, Interval Time(Sec), Cine Zoom Mode, Storage Options, and Encapsulated PDF.

- **Preset Storage Server**

To preset a storage server, please perform the following steps:

1. Click **[Device]** drop-down box to select an added device.
2. Enter the AE title and port consistent with the DICOM storage server, and enter other properties.
3. Select certain service in the service list; click **[Verify]** to verify the network connectivity.
4. Click **[Save]**, the system saves the settings and returns to the Home screen.

NOTE: Not all SCP support verification. Please confirm whether the SCP supports the verification before verification.

- **Change Server Parameters**

1. Double click the server you want to change parameter to display parameter dialog.
2. Change the parameters as needed, and click **[Update]** to update and save the current parameters.

- **Set Default Server**

Select a server in the service list, click **[Default]** and the default server is marked with a "Y".

11.1.2.2 Print

Service and print attributes, and print server connection can be found in print service screen. Print server setting is similar to storage server setting, refer to "11.1.2.1 Storage" for details.

Enter the print service preset screen via **[Preset]** (press **<Setup>**) → **[Network Preset]** → **[DICOM Service]** → **[Print]**.

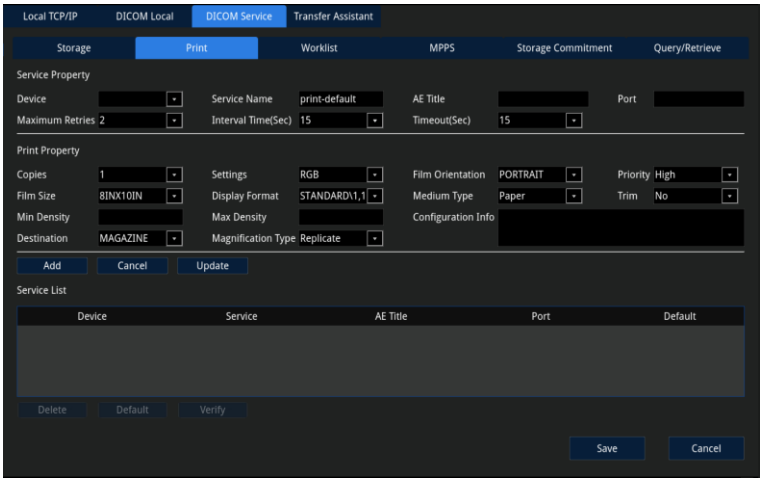

Figure 51 DICOM Service-Print

Table 44 DICOM Service-Print

Item	Description
Device	Click the drop-down box to select an added device.
Service Name	Enter a service name. Default is print-default.
AE Title	Enter the AE title. The AE Title here should be consistent with that of the print server.
Port	Enter the port number for the print server.
Maximum Retries	Set the maximum retries.
Interval Time (Sec)	Set the interval time for connection retry.
Timeout (Sec)	Refers to the amount of time after which the system will stop trying to establish a connection to the service.
Copies	Copies of each page.
Settings	Set the printer type of the printer
Film Orientation	Set the film orientation.
Priority	Set the priority of color printing.
Film Size	Set the film size.
Display Format	Specify the quantity of images per page to print. E.g. STANDARD\2, 3 means 6 images are printed for each page.
Medium Type	Set the medium type of the printer.
Trim	Set whether to print the trim box around each image of the film.
Min Density	Enter the minimum density of the film.
Max Density	Enter the maximum density of the film.
Configuration Info	Enter configuration information.

Item	Description
Destination	Set where the file is exposed.
Magnification Type	Set the magnification type for image printing.
Add	Add a server to the server list.
Cancel	Cancel parameter preset.
Update	Select a server in the service list, change the parameters and click **[Update]** to update the parameters of the server.
Service List	Display the connected print server list.
Delete	Remove the selected server from the device list
Default	Select an item in the server list as the default server, and the default server is marked with a "Y".
Verify	Verify the network connectivity between the system and print server.

NOTE: Some DICOM print features are currently reserved and unavailable. These include Maximum Retries, Interval Time(Sec), Timeout(Sec), Copies, Film Orientation, Priority, Medium Type, Min Density, Max Density, Destination, and Magnification Type.

Set the print attribute related parameters based on the actual printer requirements, for example:

- If the printer does not support **[Film Size]** as 8N*10N, do not set this size to the printer film size.
- As to **[Medium Type]**, Blue Film or Clear Film is usually used for black and white printing, and Paper is usually used for color printing. For details, please refer to the printer conformance statement.
- Other parameters can be reminded as default. If the printer has special requirements, please change the parameters according to the requirements of the printer.

11.1.2.3 Worklist

Worklist server connection properties and relevant settings can be found on the Worklist service preset screen. Worklist server setting is similar to storage server setting, refer to "11.1.2.1 Storage" for details.

Enter the Worklist service preset screen via **[Preset]** (press **<Setup>**) → **[Network Preset]** → **[DICOM Service]** → **[Worklist]**.

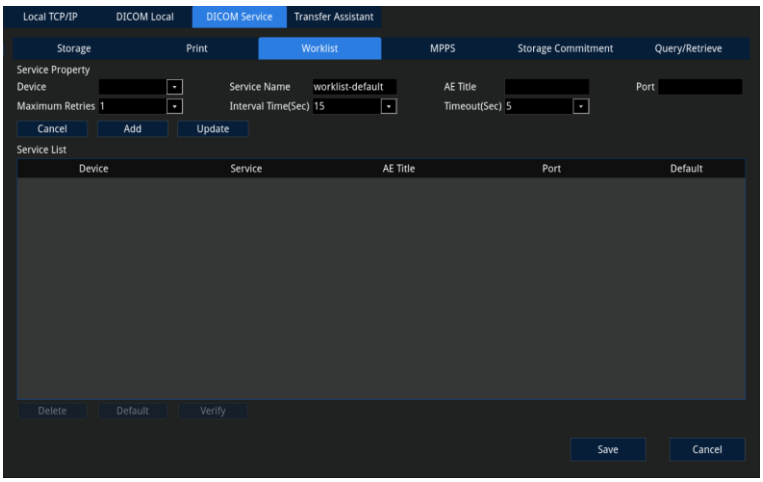

Figure 52 DICOM Service-Worklist

Table 45 DICOM Service-Worklist

Item	Description
Device	Click the drop-down box to select an added device.
Service Names	Enter a service name. Default is worklist-default.
AE Title	Enter the AE title. The AE Title here should be consistent with that of the worklist server.
Port	Enter the port number for the worklist server.
Maximum Retries	Set the maximum retries.
Interval Time (Sec)	Set the interval time for connection retry.
Timeout (Sec)	Refers to the amount of time after which the system will stop trying to establish a connection to the service.
Add	Add a server to the server list.
Cancel	Cancel parameter preset.
Update	Select a server in the service list, change the parameters and click **[Update]** to update the parameters of the server.
Services List	Display the connected worklist server list.
Delete	Remove the selected server from the device list
Default	Select an item in the server list as the default server, and the default server is marked with a “Y”.
Verify	Verify the network connectivity between the system and the worklist server.

NOTE: Some DICOM worklist features are currently reserved and unavailable. These include Maximum Retries, Interval Time(Sec), and Timeout(Sec).

11.1.2.4 MPPS

MPPS server connection properties and relevant settings can be found in the MPPS service preset screen. MPPS server setting is similar to storage server setting, refer to “11.1.2.1 Storage” for details.

Enter the MPPS service preset screen via **[Preset]** (press **<Setup>**) → **[Network Preset]** → **[DICOM Service]** → **[MPPS]**.

NOTE: When using MPPS, you need to set the MPPS server as the default server.

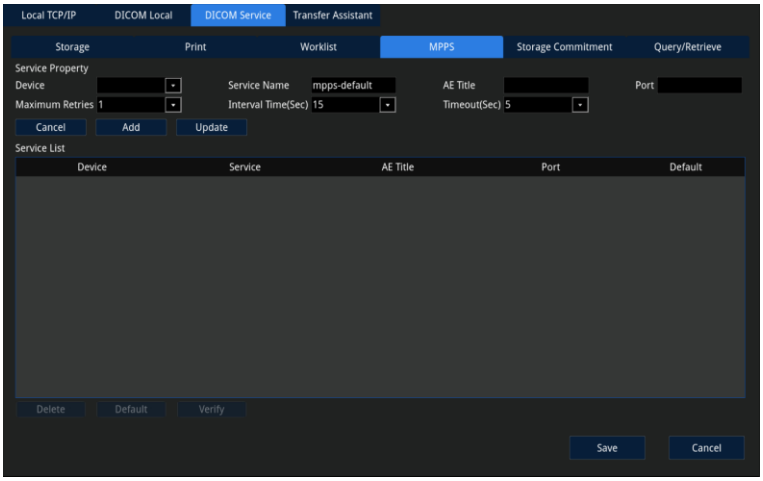

Figure 53 DICOM Service-MPPS

Table 46 DICOM Service-MPPS

Item	Description
Device	Click the drop-down box to select an added device.
Service Name	Enter a service name. Default is mpps-default.
AE Title	Enter the AE title. The AE Title here should be consistent with that of the mpps server.
Port	Enter the port number for the print server.
Maximum Retries	Set the maximum retries.
Interval Time (Sec)	Set the interval time for connection retry.
Timeout (Sec)	Refers to the amount of time after which the system will stop trying to establish a connection to the service.
Add	Add a server to the server list.
Cancel	Cancel parameter preset.
Update	Select a server in the service list, change the parameters and click **[Update]** to update the parameters of the server.
Service List	Display the connected mpps server list.

Item	Description
Delete	Remove the selected server from the device list
Default	Select an item in the server list as the default server, and the default server is marked with a “Y”.
Verify	Verify the network connectivity between the system and the mpps server.

NOTE: Some DICOM MPPS features are currently reserved and unavailable. These include Maximum Retries, Interval Time(Sec), and Timeout(Sec).

11.1.2.5 Storage Commitment Preset

Storage Commitment server connection properties and relevant settings can be found in the storage commitment service preset screen. Storage commitment server setting is similar to storage server setting, refer to “11.1.2.1 Storage” for details.

Enter the MPPS service preset screen via **[Preset]** (press **<Setup>**) → **[Network Preset]** → **[DICOM Service]** → **[Storage Commitment]**.

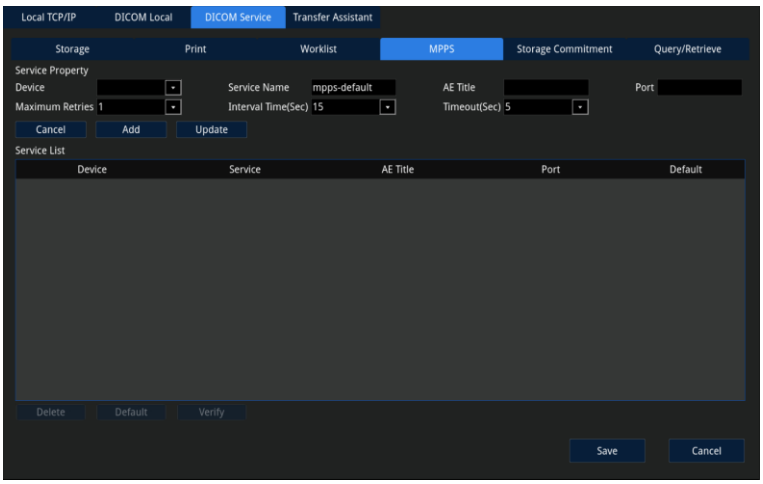

Figure 54 DICOM Service-Storage Commitment

Table 47 DICOM Service-Storage Commitment

Item	Description
Device	Click the drop-down box to select an added device.
Service Name	Enter the service name. Default is sc-default.
AE Title	Enter the AE title. The AE Title here should be consistent with that of the Storage Commitment server.
Port	Enter the port number for the Storage Commitment server.
Maximum Retries	Set the maximum retries.
Interval Time (Sec)	Set the interval time for connection retry.
Timeout (Sec)	Refers to the amount of time after which the system will stop trying to establish a connection to the service.

Item	Description
Associated Storage Service	The associated storage server should be preset before storage commitment, only after the exam is sent out, can storage commitment be created.
Cancel	Cancel parameter preset.
Add	Add a server to the server list.
Update	Select a server in the service list, change the parameters and click **[Update]** to update the parameters of the server.
Service list	Display the connected storage commitment server list.
Delete	Remove the selected server from the device list
Default	Select an item in the server list as the default server, and the default server is marked with a "Y".
Verify	Verify the network connectivity between the system and the storage commitment server.

NOTE: DICOM Storage Commitment are currently reserved and unavailable.

11.1.2.6 Query / Retrieve Preset

Query/Retrieve server connection properties and relevant settings can be found in the Query/Retrieve service preset screen. Query/Retrieve server setting is similar to storage server setting, refer to "11.1.2.1 Storage" for details.

Enter the Query/Retrieve service preset screen via **[Preset]** (press **<Setup>**) → **[Network Preset]** → **[DICOM Service]** → **[Query/Retrieve]**.

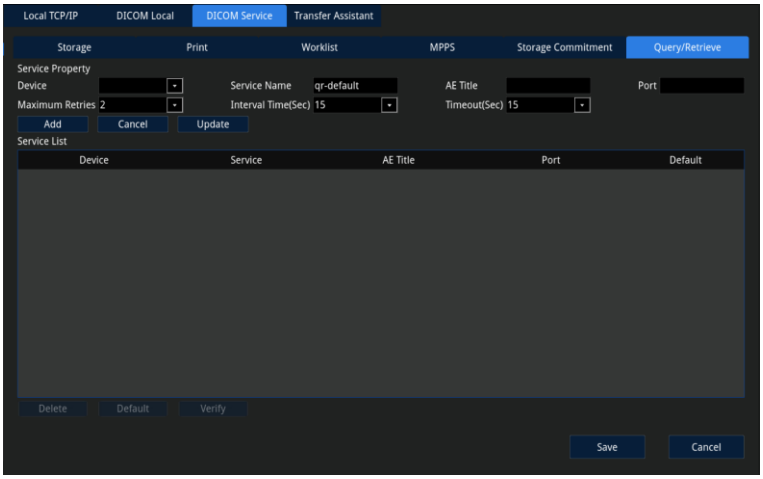

Figure 55 DICOM Service-Query/Retrieve

Table 48 DICOM Service-Query/Retrieve

Item	Description
Device	Click the drop-down box to select an added device.

Item	Description
Service Name	Enter a service name. Default is qr-default.
AE Title	Enter the AE title. The AE Title here should be consistent with that of the query/retrieve server.
Port	Enter the port number for the query/retrieve server.
Maximum Retries	Set the maximum retries.
Interval Time (Sec)	Set the interval time for connection retry.
Timeout (Sec)	Refers to the amount of time after which the system will stop trying to establish a connection to the service.
Add	Add a server to the server list.
Cancel	Cancel parameter preset.
Update	Select a server in the service list, change the parameters and click **[Update]** to update the parameters of the server.
Service List	Display the connected query/retrieve server list.
Delete	Remove the selected server from the device list
Default	Select an item in the server list as the default server, and the default server is marked with a "Y".
Verify	Verify the network connectivity between the system and the query/retrieve server.

NOTE: Some DICOM Query/Retrieve features are currently reserved and unavailable. These include Maximum Retries, Interval Time(Sec), and Timeout(Sec).

11.2 DICOM Service

After completed all DICOM presets, you are ready for DICOM image storage, DICOM image printing, work list, MPPS, storage delegation and query/acquisition services.

NOTE: Before using DICOM services, please perform verification to ensure that the system is properly connected to the DICOM server.

11.2.1 DICOM Storage

DICOM storage service sends animal image or data to storage server for remote storage.

Perform the following steps:

1. Save images. Refer to "10.1 Storage" for details.
2. Send images/data to the DICOM storage server via the Home, Station, or Review screen.
    - Related operations are similar to sending to USB storage device. See "10.5.1.2 Export

Animal Data by Sending" for details.

3. A sending dialog box pops up. Select DICOM and storage server as needed.
4. Click **[OK]** to send the image/data to the storage server.

11.2.2 DICOM Print

DICOM Print service sends animal images to print server for remote printing. Preset the print server before using DICOM Print service.

Perform the following steps:

1. Save images. Refer to "10.1 Storage" for details.
2. Send image to DICOM Print Server via following screens:
   - Move the cursor over the thumbnail of the image you want to send in the Home screen, click "⇄" icon on the image.
   - Press the **<Station>** key on the keyboard to enter the Station screen. Select desired animal, move the cursor over the thumbnail of the image you want to send and click "⇄" icon on the image.
   - Press **<Station>** key on the keyboard and click **[Review Image]** to enter the Review screen. Select one or more thumbnails and click **[Send to]**, or move the cursor over the thumbnail you want to send and click "⇄" icon on the image.
3. A sending dialog box pops up. Select DICOM and print server as needed.
4. Click **[OK]** to send the image/data to the print server.

11.2.3 DICOM Worklist

The DICOM Worklist Service is used to query or retrieve animal information stored in the server, which can be imported into the system for viewing and performing a new exam. Preset the DICOM Worklist server before using DICOM Worklist service.

To retrieve Animal information (DICOM), perform the following steps:

1. Press the **[Patient]** button on the control panel to enter the animal information screen. Click **[Worklist]** to display Worklist screen.

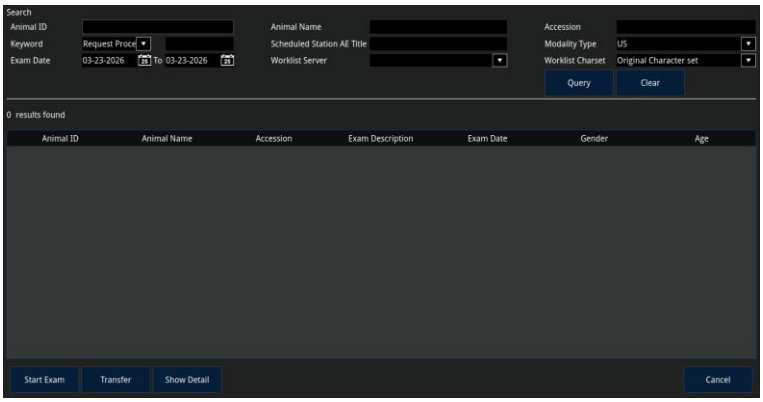

Figure 56 Worklist Screen

2. Query animal information:

    1) Set search condition among animal ID, animal name, accession number, keyword, scheduled station AE Title, device type, exam date, worklist server and other information to search for animals.

    2) Click **[Query]** to display animal information which meets the search conditions in the lower part of the screen. Or click **[Clear]** to clear the entered query criteria and the query results.

3. Select a character set from the **[Worklist Charset]** drop-down list.

    - The system decodes the queried data according to the selected character set.

4. Select desired animal record in the displayed animal list:

    - **[Start Exam]**: click to return to the Home screen and start a new exam for the selected animal.
    - **[Transfer]**: click to import the selected animal information into the **[Animal Information]** screen for editing. After editing, click **[Save]** to start a new exam. Or click **[Cancel]** to return Home Screen without a new exam.
    - **[Show Detail]**: click to view the detailed animal information.
    - **[Cancel]**: click to exit worklist screen and return to the animal information screen.

11.2.4 DICOM MPPS

MPPS is used to send animal exam status to the MPPS server. This will facilitate the other systems to obtain the exam progress in time. Preset the DICOM MPPS server before using DICOM MPPS service.

When MPPS preset is done, the animal exam status will be sent to the MPPS server as follows:

- When start a new exam, the system sends an “N-CREATE” message to the MPPS server.
- After the image acquisition completes, the system sends an “N-SET COMPLETED” message to the MPPS server.
- When the image acquisition is abnormally terminated, the system sends “N-SET DISCONTINUED” to the MPPS server.

11.2.5 DICOM Storage Commitment

After the animal exam information on the system is sent to the storage server, the system can detect whether the information transmission is successful through the storage commitment server. Preset the DICOM Storage Commitment server before using DICOM Storage Commitment service.

11.2.5.1 Send animal exam to DICOM storage server

Perform the following steps:

1. After completing the exam, press the **[EndExam]** button on the control panel to end the current exam.
2. Press the **<Station>** key on the keyboard to enter the Station screen.
3. Select the desired animal from the animal list, click **[Send Exam]**.
4. A sending dialog box pops up. Select DICOM and storage server as needed.
5. Click **[OK]**, the image and data will be sent to the DICOM storage server, and the storage commitment server will prompt the sending status in the prompt bar.

11.2.5.2 Auto send animal exam to DICOM storage server

Send images automatically to the DICOM storage server and perform storage commitment when the exam is done.

Set the auto function via **[Preset]** (press **<Setup>**) → **[System Preset]** → **[General]** → **[Send after Exam]**.

When the exam completes, the system prompts whether the exam information was successfully sent to the DICOM storage server.

11.2.6 DICOM Query / Retrieve

The query/retrieve server is used to query and retrieve the animal exam information from the designated server, so as to remotely obtain other exam information of the animal.

Preset the query/retrieve server before using DICOM query/retrieve service.

To query / retrieve animal information, please perform the following steps:

1. Press the **<Station>** key on the keyboard to enter the Station screen.
2. Click **[Query/Retrieve]** to enter query/retrieve screen.
3. Select the source server (query location) for accessing animal information, and the target server (retrieve location) in **[Server & Service]**.
4. Enter query information, such as an animal ID, animal name, serial number, keyword, or the time period to screen the animal.
   - Click **[Clear]** to clear the entered query conditions and results.
5. Click **[Query]** and the qualified animals are displayed in the animal list.
   - If the list is more than one page, roll the right slider bar of the list to find the animal information.
   - Move the trackball and press the **<Ctrl>** + **[Set]** button to select more than one animal.
   - Click **[Select All]** to select all animals.
   - Click **[Cancel All]** to cancel multiple or all animals selected in the list.
6. Click **[Retrieve]**, the system will retrieve the selected animal record to the target server or local and the animal information displays in the animal list after completion.

7. After completing retrieval, click **[Exit]** to see the retrieved animal records on the Station screen.

11.3 Structured Report

Structured reports cannot be exported separately and can only be exported with animal data. When exporting animal data, if there is a structured report, the structured report will be exported to the external storage device as well.

Perform the following steps:

1. After completing the exam, press the **[EndExam]** button on the control panel to end the current exam.
2. Press the **<Station>** key on the keyboard to enter the Station screen.
3. Click **[Send Exam]** to pop up the sending exam dialog box.
4. Select the desired storage device, check **[Export Report]** as needed and click **[OK]** to start exporting.

Chapter 12 Probe and Biopsy

Prior to the exam, the user must fully understand the function of the probe.

To ensure the performance and safety of the probe, regular cleaning, disinfection, and maintenance shall be taken.

12.1 Probe

This section mainly introduces the general operation of the probe.

12.1.1 Structure of Probe

The ultrasonic probes suitable for this system are all electronic scanning probes, which generate high-resolution images by transmitting ultrasonic waves into the human body and receiving echoes. The system supports surface probes and endocavity probes.

The basic structure of the probe is shown in the figure below. The orientation mark on the probe is consistent with the direction indicated by the probe mark "Z" on the ultrasonic image.

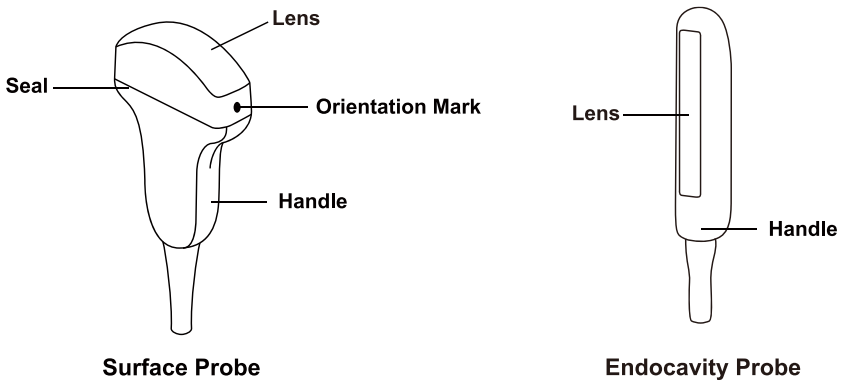

Figure 57 Structure of Probe

12.1.2 Probe Usage

Warning

- **DO NOT use any probe not provided by the manufacturer, otherwise the console and probe will be damaged. In serious cases, fire and other accidents may result.**
- **Use the probe with care. Stop use immediately if the probe appears to be malfunctioning. Otherwise, electric shock and burns may result.**
- **Carefully inspect the probe sheath for damage or breakage before use. Do not use a damaged probe sheath to prevent infection.**
- **DO NOT use mineral oils, oily coupling gel, gels with any type of detergent or softener, and other unapproved materials to replace coupling gel supplied or recommended by the manufacturer. Otherwise, probe damage may result.**

- **Use qualified ultrasonic coupling gel and read the coupling gel manual carefully before use.**
- **Wear medical gloves when using the endocavity probe.**

Perform the following steps:

1. Check the probe. The probe may have potential damage during use and cleaning. Therefore, the following checks should be performed on the probe before use to ensure:
   - No cracks on the probe
   - No cracks on the front part of the probe
   - No scratch on the lens
   - No expansion on the lens
   - No cracks or any other damage on the strain relief
   - No cracks or any other damage on the connector
   - No bent or broken pins
   - No cable damage
2. Connect the probe to the system. Refer to “3.6.1 Connect the Probe” for details.
3. A protective probe sheath should be used when using an endocavity probe.
   1) Remove the package, take out and unfold the probe sheath.
   2) Add an appropriate amount of coupling gel to the probe sheath.
   3) Insert the probe into the sheath.
   4) Fit the sheath by hand and ensure the cover is free from creases and bubbles.
   5) Secure the sheath with an elastic band.
   6) Check the probe sheath to ensure there is no hole or crack.



Figure 58 Add coupling gel into the probe sheath

4. Recognize the direction of probe and perform the exam.

5. After completing each exam, clean and disinfect the probe as required. Remove the probe sheath and dispose of the sheath in accordance with the medical specifications for bio-hazardous waste.

12.1.3 Probe Cleaning

After completing each exam, the probe and reusable parts should be thoroughly cleaned as required. Failing to do so may result in the probe and the bracket becoming sources of infection.

Warning

- **Never immerse the probe connector into liquid such as water or disinfectant. Immersion may cause electrical shock or malfunction.**
- **Prior to cleaning the probe, disconnect the probe from the ultrasonic system to avoid electric shock.**
- **When cleaning the probe, avoid impacting the probe with sharp or hard objects.**
- **Always wear sterile gloves to prevent infection when performing cleaning of probe.**
- **No cleaning and disinfecting may result in the probe becoming a source of infection.**

NOTE:

- **After the examination, wipe off the coupling agent thoroughly. Otherwise, the coupling agent may solidify and degrade the image quality of the transducer.**
- **DO NOT make the probe overheated (more than 55℃) during cleaning procedure. High temperatures may result in probe deformation or damage.**

After each exam, the probe should be cleaned as required:

1. Disconnect the probe from the system.
2. Wear sterile gloves to prevent infection.
3. Rinse the probe with pure water for 2 minutes to remove foreign matters on the surface of the transducer. Or wipe the transducer with a soft lint-free cloth dipped in neutral enzyme detergent for 1 minute to further remove contaminants. Avoid using a brush, as it may damage the transducer.
4. After rinsing, wipe the surface of the transducer with a sterile cloth or gauze dipped in pure water for 1 minute to remove the residual detergent on the surface.
5. Dry the transducer using a sterile cloth. Do not dry the transducer by heating.

12.1.4 Probe Disinfection

After each exam, the probe and reusable parts should be thoroughly disinfected as required. Failing to do so may result in the probe and the bracket becoming sources of infection.

Warning

- **It is recommended to use the disinfectant listed in this manual and ensure that its concentration and probe immersion time meet the recommended requirements. Fail to do so may damage the probe and void the probe warranty; if the user has special purpose and requirements, ensure that the formulated solution concentration and probe immersion time are appropriate for the intended clinical use.**
- **The probe must be disinfected with a liquid chemical disinfectant that complies with local regulations.**
- **DO NOT use high pressure steam or ethylene oxide to contact with the probe.**
- **DO NOT the probe by heating under any circumstances. If the temperature exceeds 55℃, the probe will be damaged**
- **DO NOT allow any disinfectant to air dry on the probe.**
- **Before disinfecting the probe, please pay attention to the expiration date of the disinfectant and never use expired disinfectant.**
- **Always wear sterile gloves to prevent infection.**

NOTE: **Repeated disinfection will eventually damage the probe, please check the probe performance periodically.**

12.1.4.1 Disinfection Level Definition

The disinfection category can be divided into the following two categories based on the application of the probe.

Table 49 Disinfection Category

Disinfection level	Application scope	Application probe
High Level Disinfection	Contact with mucous membranes	Endocavity probe
low level disinfection	Only contact with intact skin	Surface probe

12.1.4.2 Immersion Disinfection Limit

Never immerse the probe deeper than the line shows below for disinfection (the immersion limit also applies during normal use and performance evaluation).

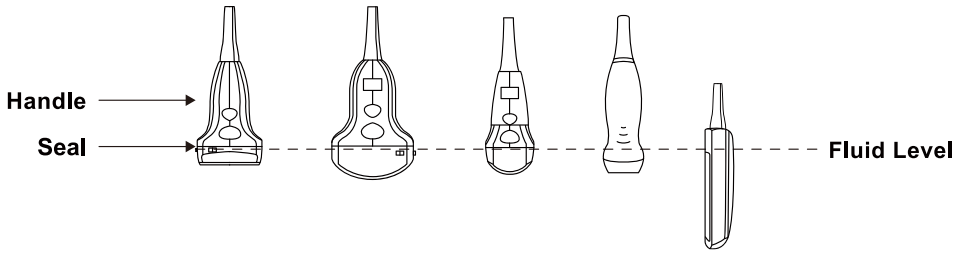

Figure 59 Immersion limitation for Different Probe Type

12.1.4.3 Disinfection for Surface Probe

After each exam, the surface probe should be disinfected as required.

Perform the following steps:

1. Wear sterile gloves to prevent infection.
2. Cleaning the probe. (Refer to “12.1.3 Probe Cleaning” for details)
3. Disinfect the probe according to the low-level disinfection method recommended in the table below.

Table 50 Low-level Disinfection

Disinfectant	Manufacturer	Active ingredient	Concentration	Manner of contact	Contact time
Cidex	J&J	OPA	0.55%	Soak	3 min

4. Rinse the transducer with plenty of sterile water for at least 1 minute to remove all chemical residues. Or follow the rinsing method recommended by the disinfectant manufacturer to rinse the transducer.
5. After rinsing, wipe the surface of the transducer with a sterile cloth dipped in sterile water for 1 minute to further remove any residual disinfectant on the surface.
6. Wipe off water on the transducer using a sterile cloth. Do not dry the transducer by heating.

NOTE:
- **The recommended disinfectants listed in this manual are recommended because they are chemically compatible with the materials of the products, not because of their biological effects. For the biological effects of disinfectants, please refer to the guidance and recommendations provided by the disinfectant manufacturer, the US Food and Drug Administration, and the US Centers for Disease Control.**
- **If the disinfectant recommended in this manual is not selected, prepare the solution according to the disinfectant manufacturer’s instructions.**

12.1.4.4 Disinfection for Endocavity Probe

Before and after each exam, the endocavity probe should be disinfected as required.

Perform the following steps:

1. Wear sterile gloves to prevent infection.
2. Cleaning the probe.
3. Perform high-level disinfection according to the following disinfectants.

Table 51 High-level Disinfection

Disinfectant	Manufacturer	Active ingredient	Concentration	Manner of contact	Contact time
Cidex	J&J	OPA	0.55%	Soak	15 min

4. Rinse the transducer with plenty of sterile water for at least 1 minute to remove all chemical residues. Or follow the rinsing method recommended by the

disinfectant manufacturer to rinse the transducer.

5. After rinsing, wipe the surface of the transducer with sterile cloth dipped in sterile water for 1 minute to further remove the residual disinfectant on the surface.
6. Wipe off water on the transducer using a sterile cloth. Do not dry the transducer by heating.

NOTE :

- **The recommended disinfectants listed in this manual are recommended because they are chemically compatible with the materials of the products, not because of their biological effects. For the biological effects of disinfectants, please refer to the guidance and recommendations provided by the disinfectant manufacturer, the US Food and Drug Administration, and the US Centers for Disease Control.**
- **If the disinfectant recommended in this manual is not selected, prepare the solution according to the disinfectant manufacturer's instructions.**

12.1.5 Probe Maintenance

The probe should be used, stored or transported under the conditions of "Appendix A Technical Specifications".

12.1.5.1 Probe Transportation

To properly store the probe for transportation, please perform the following steps:

1. Before placing the probe in the shipping container, make sure the probe is cleaned and sanitized to avoid contaminating the liner foam of the shipping container.
2. Carefully place the probe in the probe box.
3. Ensure the probe is totally in the box before covering the probe box.
4. Wrap the probe box in a plastic material with air bag (such as foam) and place the wrapped probe box into the cardboard box.

12.1.5.2 Probe Storage

To protect the probe, follow the guidelines below:

- Place the probe in the probe holder when the probe is temporarily idle.
- If the probe is not used for a long time, clean and disinfect the probe to ensure that the probe is completely dry before storing it in the probe box.
- Prior to placing the probe, make sure the probe holder is clean and dry.
- Separately store the probe from other medical devices.

12.2 Biopsy

Warning

- **Physicians who use this system for biopsy must undergo professional ultrasound guidance training and strictly observe the operation requirements of biopsy to avoid unnecessary harm to animals.**
- **Before a biopsy procedure is performed, confirm that the needle-guided bracket is in good condition, and the biopsy guide line and the bracket must be calibrated.**
- **The biopsy guide line displayed on the ultrasound image is for reference only. During biopsy procedure, the operator should always monitor the position of the needle and confirm the correct needle position.**
- **DO NOT freeze the image during the biopsy procedure to avoid positioning errors.**
- **The operator should maintain a high concentration of attention during the biopsy procedure to avoid medical accidents.**
- **Gloves should be worn when performing biopsy procedure.**
- **Never allow to reuse the biopsy needle.**
- **A probe with sheath must be used during the biopsy procedure.**

12.2.1 Calibrate the Biopsy Guide Line

Calibrating the guide line is necessary before each biopsy procedure or changing biopsy angle.

Perform the following steps:

1. Install the needle-guided bracket.
2. Place the head of the probe in a liquid tank with distilled water.
3. Insert the puncture needle along the needle-guided bracket until the tip of the puncture needle is at the maximum depth of the water.
4. In B mode, press the **<Biopsy>** key to enter the Biopsy screen.

Item	Description
Biopsy Kit	Select bracket kit and angle.
Calibrate	Click to enter the biopsy calibration screen.
Double Line	Click to enable / disable double guide line function.
Line Type	Select the biopsy guide line type.
Exit	Exit the biopsy screen.

5. Tap **[Biopsy Kit]** on the touch screen to select appropriate kit and angle.
6. Tap **[Calibrate]** on the touch screen to enter the biopsy guide line calibration screen.

7. Verify that the needle displayed on the ultrasound image matches the guide line. If not, adjust the guide line angle and position.
   - Rotate the knob under **[Position]** to adjust the guide line position.
   - Rotate the knob under **[Angle]** to adjust the guide line angle.
8. After calibration, click **[Save]** to save the adjustment.
   - To restore the factory settings, tap **[Restore]** on the touch screen and click **[Save]**.
9. Tap **[Exit]** on the touch screen to exit the Biopsy menu, or press **<Biopsy>** on the keyboard to exit the Biopsy function.

12.2.2 Biopsy Procedure

Before performing a biopsy procedure, determine the size of the biopsy target and the practicability of the biopsy procedure.

Perform the following steps:

1. Connect the probe to the ultrasonic system and install the needle-guided bracket to the probe.
2. In B mode, press the **<Biopsy>** key to enter the Biopsy screen, a guide line displayed on the ultrasound image.
3. Select an appropriate needle-guided bracket and perform the guide line calibration. Refer to “12.2.1 Calibrate the Biopsy Guide Line” for details.
4. If necessary, use the Biopsy Enhance function to improve the visualization of the needle on the ultrasound image.
   1) Press the user-defined Biopsy Enhance button to activate needle enhancement. (For details of customizing a user-defined button, see “4.2.5 Customize”.)
      - Tap **[B/Enhance]** on the touchscreen to turn on/off the simultaneous real-time display of B-mode image and Biopsy Enhance image.
      - Rotate the knob under **[Direction of puncture]** to select the needle direction indicator according to the actual needle direction.
      - Rotate the knob under **[Beam angle]** to select the beam steering angle perpendicular to the needle direction.
   2) Press the user-defined Biopsy Enhance button again to exit needle enhancement.
5. Position the sampling target and make the target or lesion displayed on the guide line.

NOTE: DO NOT freeze the image when scanning or adjusting, otherwise the real-time biopsy process may fail to display.

6. Insert the needle through the needle guide hole and take a sample at the appropriate location.

7. After the biopsy procedure is completed, carefully remove the puncture needle from the animal.
8. Remove the needle-guided bracket from the probe and dispose of the disposable contaminated waste such as probe sheath as required by local regulations.
9. Press the **<Biopsy>** key again to exit the Biopsy screen.

12.2.3 Bracket Cleaning and Disinfection

To avoid cross-infection, please strictly follow the infection control policy formulated by the local hospital and clean and disinfect the needle-guided bracket after each biopsy.

NOTE:
- **Never disinfect the needle-guided bracket with a disinfectant containing chloride ion (Cl-) or fluoride ion (F-).**
- **Always wear sterile gloves to avoid infection during cleaning and disinfection.**
- **Low performance may result due to repeated disinfection, please change the needle-guided bracket as needed.**

Perform the following steps to clean and disinfect the needle-guided bracket:

1. After each use, remove the bracket from the probe. Use a small, soft brush to remove visible foreign matters from bracket surface and clean the metal lumen with the attached cleaning brush. Clean as soon as possible to avoid parts being dry and difficult to clean.
2. Immerse the bracket for at least five minutes in neutral pH low foam enzyme cleaner. When soaking, brush off the residual foreign matter. If visible foreign matters are difficult to remove, repeat the soaking procedure for another five minutes. Remove the bracket from the cleaning solution and wipe off all residues with a sterile cloth. Please follow the manufacturer's instructions for cleaner solution.
3. Disinfect and sterilize the bracket using one of the following methods:
   - Immerse the bracket in 2% glutaraldehyde based solution for 10 hours at room temperature.
   - High-pressure steam sterilization. Autoclaving (134℃ ± 4℃) for 20 minutes.

12.2.4 Bracket Storage and Transportation

The bracket is packed in non-sterile packaging. After sterilization, it should be properly stored in a sterile environment.

When using 2% glutaraldehyde based solution for disinfection and sterilization, the service life of the bracket is 2 years. When using High-pressure steam sterilization for disinfection and sterilization, the service life of the puncture frame is 5 years. Before discarding or returning to the manufacturer for maintenance, please disinfect and sterilize the bracket first.

Chapter 13 System Maintenance

To avoid long-term exposure to dust and moisture which may result in poor performance and safety of the system, routine system maintenance should be performed by the user.

Warning

- **When cleaning the system, pay special attention not to let liquid enter any part of the system. Otherwise, electric shock may result. If liquid is accidentally into the system, stop cleaning the system immediately and shut down the system, contact Zoncare Customer Service Department or sales representative.**

NOTE:

- **Before cleaning procedure, shut down the system and unplug the power cord. Otherwise, electric shock may result.**
- **Maintenance shall be taken regularly to ensure the performance of the system, and ensure that the system is well grounded and meets the safety requirements.**
- **Except for the basic cleaning and maintenance described in this section, only personnel authorized by the manufacturer may perform other maintenance.**

13.1 External Cleaning

Perform the following steps:

1. Shut down and unplug the system.
2. Apply a few drops of 75% alcohol to moist a piece of lint-free cloth.
3. Gently wipe the display, touch screen, control panel, and other panel surfaces of the console with the lint-free cloth.

NOTE: Do not use cleaners or other cleaning fluids to clean the surface of the monitor.

4. Use a cotton swab to remove dirt from the control panel buttons to ensure that solid material does not fall into the console.
5. If blood or other infectious materials come into contact with the buttons or other parts of the system, wipe them with a 70% isopropyl alcohol solution.
6. Clean the air filter on the console regularly to ensure the cleanness and ventilation of the console.

13.1.1 Clean the Trackball

Perform the following steps:

1. Shut down and unplug the system.
2. Press the bulges on the clamping ring by two figures and turn the ring counterclockwise until it unlocked.

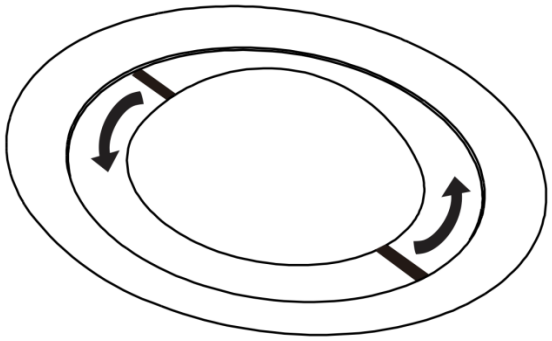

Figure 60 Unlock the Clamping Ring

3. Remove the clamping ring and take out the rotary ball.
4. Remove stains from the trackball and the ring with a soft, lint-free cloth to draw 75% alcohol.
5. Use a cotton swab to draw 75% alcohol to wipe the slot of the trackball.
6. After cleaning, put the trackball and clamping ring back and rotate it clockwise to fix it.

13.1.2 Clean the Probe Holder

Perform the following steps:

1. Move the probe holder towards the rear side of the system along the probe bracket and take out the probe holder.

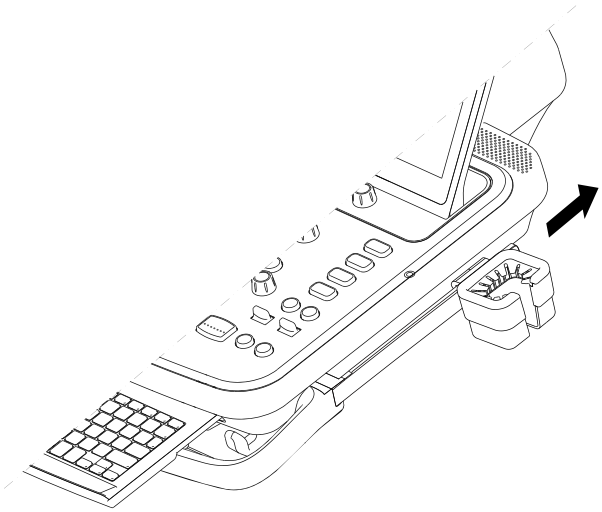

Figure 1 Take out the Probe Holder

2. Remove stains from the probe holder with a soft, lint-free cloth or brush to draw 75% alcohol.
   - If there are solid stains such as coupling gel, brush gently with a soft brush moistened with mild soapy water or detergent, and dry with a dry soft towel or air dry naturally.
3. After cleaning, put the probe holder back into the probe bracket.

13.1.3 Clean the Gel Warmer

Warning **When cleaning the gel warmer, do not put the warmer under water, otherwise it will damage the electronic components inside the warmer.**

Perform the following steps:

1. Remove the Gel warmer. Pull out the gel warmer power cord from the bottom of the control panel and move it along the probe bracket toward the back side of the system to remove the gel warmer.

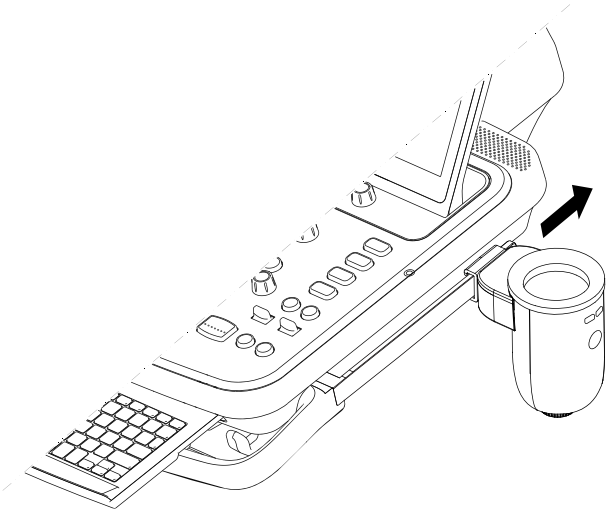

Figure 2 Remove the Gel Warmer

2. Clean the gel warmer.

   1) Rotate the screw knob on the bottom cover counterclockwise until it is completely loosened, then remove the bottom cover.

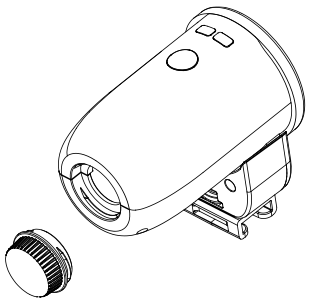

Figure 3 Remove the Bottom Cover

   2) Remove stains from the warmer with a soft, lint-free cloth or brush to draw 75% alcohol.

   3) If there is a large amount of coupling gel stuck in the bottom cover, clean the bottom cover with a brush dampened with mild soap or detergent and dry with a dry soft towel.

13.1.4 Clean the Printer

To clean the printer housing, please perform the following steps:

1. Before cleaning the printer, turn off the power and disconnect the power cord.
2. Use a clean and soft cloth to absorb an appropriate amount of isopropanol with a concentration of 50~70v/v% or ethanol with a concentration of 76.9~81.4v/v% and wipe the printer surface.
3. Stubborn stains can be removed with a soft cloth dampened with a mild detergent solution, and then cleaned with the chemicals mentioned above.
4. After cleaning, place the printer in a cool and ventilated environment to dry.

NOTE:
- **Do not wipe the printer surface too hard, otherwise the printer surface may be damaged.**
- **Do not make the printer surface contact with rubber or vinyl products for a long time.**

13.1.5 Clean the ECG equipment

To clean ECG cables and leads, please perform the following steps:

1. Unplug the ECG cable from the ECG lead port.
2. Wipe the surface of the cables and leads with a soft cloth slightly moistened (damp; not dripping) with 75% ethanol, and pay attention to avoid the metal parts.
3. Dry the cables and leads in a cool, ventilated environment.

13.2 Safety Check

To guarantee a high degree of operational reliability, regular inspection of the system by the maintenance and operating personnel is necessary for the following:

Table 52 Security Checklist

No.	Scope	Check item
1	Electrical safety	Inspect the cables for being broken or cracked.
		Check the grounding impedance.
		Check the leakage current.
		Check the animal leakage current.
		Check the animal auxiliary leakage current.
2	Mechanical Safety	Check the appearance.
		Check the control panel and keyboard.
		Check the knob and button.

		Check the casters.
		Check the ports.
3	Image Recording	Check display of each mode.
		Check parameter of each mode.
		Check image and report.

NOTE: Liquid or other substances seeping into the electronic components under the panel may result in intermittent failure of the control panel and keyboard. Visually inspect for potential problems.

13.3 Troubleshooting

Table 53 Troubleshooting

No.	Failure	Measure
1	Power-on failure	● Check if the power cord is properly plugged into the power connector. ● Check if the circuit breaker is turned on. ● Check if the main power switch on the power supply panel is turned on.
2	No display on the monitor	● Check if the monitor is well connected. ● Check the brightness and contrast of the monitor.
3	The buzzer sounds and the buttons do not function.	Check if there is any button stuck on the control panel. If so, press the button to release the stuck button, and check if there is dirt under the stuck button and clean it promptly.
4	Abnormal image quality	● Check if the appropriate probe and mode are selected. ● Check if the relevant parameters are adjusted. For details, please refer to “Chapter 6 Optimizing the Image”. ● Check the related settings. For details, see “4.2 System Preset”.
5	Missing of application measurement item	● Check if the selected probe is applicable for current exam. ● Check if the application item is added.

When the above failures occur, and the corresponding measures still cannot solve, please contact the manufacturer or authorized personnel for further support. In case of more difficult situations, please contact the manufacturer or authorized personnel.

13.4 Disposal

When the system, probe, needle-guided bracket and other accessories reach the end of their service period, they shall be disposed of according to the regulations on waste electrical and electronic equipment (WEEE) or local regulations.

Refer to manufacturer or supplier for information on disposal or recycle.

The manufacturer does not assume liability for any damage caused by unauthorized handling of the system without consulting.

NOTE: The definition of the WEEE label applies to EU member states only: The use of this symbol indicates that this system should not be treated as household waste. By ensuring that this system is disposed of correctly, you will help prevent bringing potential negative consequences to the environment and human health. For more detailed information with regard to returning and recycling this system, please consult the distributor from whom you purchased the system.

For system products, this label may be attached to the main unit only.

13.5 After Sales Service

Service should only be provided by qualified technical personnel authorized by the manufacturer.

Contact the after-sales service department via following ways when you need technical support:

Manufacturer: Wuhan Zoncare Bio-medical Electronics Co., Ltd.

Address: #380, High-tech 2nd road, Eastlake high-tech district, Wuhan, Hubei, P. R. China

Zip code: 430206

Telephone: +86(27)87770581

Fax: +86(27)87770203

Website: http://www.zoncare.com

Appendix A. Technical Specifications

Standard Reference	EN 60601-1:2006+A1:2013+A12:2014+A2:2021	Medical electrical equipment - Part 1: General requirements for basic safety and essential performance
	EN 60601-1-2:2015+A1:2021	Medical electrical equipment - Part 1-2: General requirements for basic safety and essential performance - Collateral standard: Electromagnetic disturbances - Requirements and tests
	EN 62304:2006/A1:2015	Medical device software - Software life-cycle processes
	EN 60601-2-37:2008+A1:2015	Medical electrical equipment - Part 2-37: Particular requirements for the basic safety and essential performance of ultrasonic medical diagnostic and monitoring equipment
	ISO 10993-1:2018	Biological evaluation of medical devices - Part 1: Evaluation and testing within a risk management process
	ISO 10993-5:2009	Biological evaluation of medical devices - Part 5: Tests for in vitro cytotoxicity
	ISO 10993-10:2021	Biological evaluation of medical devices - Part 10: Tests for skin sensitization
	ISO 10993-23:2021	Biological evaluation of medical devices - Part 23: Tests for irritation
	EN ISO 13485:2016	Medical devices - Quality management systems - Requirements for regulatory purposes
	EN ISO 14971:2019+A11:2021	Medical devices - Application of risk management to medical devices (ISO 14971:2019)
	EN ISO 20417:2021	Medical devices – Information to be supplied by the manufacturer
	ISO 15223-1:2021	Medical devices - Symbols to be used with information to be supplied by the manufacturer- Part 1: General requirements
	EN 62366-1:2015/A1:2020	Medical devices - Part 1: Application of usability engineering to medical devices
	EN 60601-1-6:2010/A2:2021	Medical electrical equipment - Part 1-6: General requirements for basic safety and essential performance - Collateral standard: Usability
Safety Classification	Electrical shock	Class I equipment, Internally powered equipment
	Degree of shock	Type BF Equipment
	Operating mode	Continuous

	EMC	CISPR 11 Class A	
	Installation and usage	Mobile equipment	
	Degree of protection, ingress	Console: IPX0 Probe (cable and head): IPX7 Foot Switch: IPX4	
	Flammable mixtures	Not for use in presence of flammable anesthetic mixture with air, oxygen or nitrous oxide. Store the product in a dry and well-ventilated room. External grounding protection must be used to reduce possible external AC interference.	
Environmental Requirements	/	Operating	Transport and storage
	Relative humidity	25%~85%	10%~90%
	Ambient temperature	5°C～+40°C	-20°C～+55°C
	Atmospheric pressure	800hPa~1060hPa	800hPa~1060hPa
Hardware/ Software	Minimum Hardware Configuration	CPU: 2.3GHz Memory: 8G Hard disk: 500GB	
	Software Configuration	Operating system: 64-bit Linux Kernel version: 4.15.0-142-generic or later	
	Software Version	Release version: V1	
Network	Network Condition	Cable network, transmission data format: TCP, IP, DICOM	
	Data Interface	RJ45: Ethernet port, TCP/IP protocol USB: - USB 2.0 and USB 3.0 protocols - USB-based 802.11ac Wi-Fi adapters - USB-based Bluetooth 4.0 adapters DVD: SATA3.0 protocol	
	User Access Control	Supports three levels of user access authorization, including administrator, operator, and emergency user; users are able to login/out and switchover with username and password.	
	Security Software	/	/
	System Software	Software: SELinux (Security-enhanced Linux) Model: Linux	
	Support Software	Name : UFW (UncomplicatedFirewall) Model: Linux	
	Application Software	Name : AppArmor Model: Linux	
Bluetooth	Transmission Frequency	2400MHz~2483.5MHz	

	Occupied Bandwidth		≤2MHz	
	Modulation Type		GFSK	
	Transmission Power		≤20dBm (EIRP)	
Zonnet Imaging	Network		WAN (Internet/dedicated line) and LAN	
	Interface Requirements	Interface	Protocol / Standard	Function
		Network	Ethernet (RJ45, 100 Mbps)	Wired high-bandwidth connection for fixed clinical setups (e.g., ultrasound departments)
		Control	RESTful API, WebSocket	Remote control of the ultrasound system (probe adjustment, parameter settings)
		Data	WebRTC	Real-time transmission of images, audio, and text
		Security	HTTPS (TLS 1.0/ 1.2/1.3), AES-256	All communications encrypted
	Minimum Network Performance	Metric	Ultrasound	Server
		Bandwidth	20Mbps	100Mbps
		Latency	≤200ms	≤200ms
		Packet Loss	≤0.1%	≤0.1%
		Jitter	≤30ms	≤30ms
		Encryption	/	TLS 1.3
	Concurrent Users	Per device	1 user	/
		System	/	100 concurrent sessions
	Audio/Video Performance	Audio	- Codec: Opus - Sampling ⩾16kHz - Latency <150ms - Redundant encoding for packet loss	
		Video	- Codecs: H.264/VP8/VP9/AV1 - Resolution ≥720p@15fps - Latency <200ms - Adaptive bitrate: 500kbps–10Mbps	
Specification	Monitor		21.5" LCD	
	Touch Screen		13.3" touch screen	
	Dimension		605mm*530mm*1380-1570mm	

	Weight (without accessories)	About 52kg
Power Requirement	Power Supply	100-240V ~
	Power Supply Frequency	50Hz/60Hz
	Input Power	100-240V ~ , 4-2.3A
	Output Power	240VA
	Circuit Breaker	250V ~ , 10A
	Fuse Specification	50CT-T6.3AH 250V
		5H-T6.3AH 250V
	Battery	14.4V/6500mAh

Appendix B. EMC Statement

Electromagnetic compatibility (EMC) is defined as the ability of a product, device, or system to function satisfactorily in its electromagnetic environment; and, in addition, to not introduce intolerable electromagnetic disturbances to anything in that same environment.

Electromagnetic immunity is the ability of a product, device, or system to function satisfactorily in the presence of electromagnetic interference (EMI).

The system has been designed and manufactured in compliance with existing electromagnetic compatibility requirements. Use of the system in the presence of an electromagnetic field can cause performance degradation such as abnormal output. If this occurs often, review the environment in which the system is being used to identify possible sources of radiated emissions. These emissions could be from other electrical devices used within the same room or an adjacent room, or from portable and mobile RF communications equipment such as cellular phones and pagers, or from the existence of radio, TV, or microwave transmission equipment located nearby. In cases where electromagnetic interference (EMI) is causing disturbances, it may be necessary to relocate your system or take other measures to mitigate EMI.

⚠ Warning	• **Use of this equipment adjacent to or stacked with other equipment should be avoided because it could result in improper operation. If such use is necessary, this equipment and the other equipment should be observed to verify that they are operating normally.** • **Use of accessories, probes and cables other than those specified or provided by the manufacturer of the Ultrasound system could result in increased electromagnetic emissions or decreased electromagnetic immunity of this equipment and result in improper operation.** • **Portable RF communications equipment (including peripherals such as antenna cables and external antennas) should be used no closer than 30 cm (12 inches) to any part of the Ultrasound machine, including cables specified by the manufacturer. Otherwise, degradation of the performance of this equipment could result.**
NOTE:	• **The system needs special precautions regarding EMC and needs to be installed and used according to the information provided in this section.** • **The EMISSIONS characteristics of this equipment make it suitable for use in industrial areas and hospitals (CISPR 11 class A). If it is used in a residential environment (for which CISPR 11 class B is normally required) this equipment might not offer adequate protection to radio-frequency communication services. The user might need to take mitigation measures, such as relocating or re-orienting the equipment.** • **Position system further from source of conducted RF noise to prevent conducted RF immunity.**

If the system is operated within the electromagnetic environment specified in following

tables, the system will remain safe and provide the following basic performance:

- Free from noise on a waveform or artefacts or distortion in an image or error of a displayed numerical value which cannot be attributed to a physiological effect and which may alter the diagnosis.
- Free from the display of incorrect numerical values associated with the diagnosis to be performed. [a]
- Free from the display of incorrect safety-related indications. [a]
- Free from the production of unintended or excessive ultrasound output.
- Free from the production of unintended or excessive TRANSDUCER ASSEMBLY surface temperature.
- Free from the production of unintended or uncontrolled motion Of TRANSDUCER ASSEMBLIES intended for intra-corporeal use.

[a] "incorrect" in the sense that the displayed value differs from what is calculated (having been altered during data transfer), or the calculation itself is not correct.

B.1 Electromagnetic Interference

Electromagnetic interference (EMI) may appear in many ways within the system, depending on the operating mode of the equipment, the imaging control settings, the type of probes being used, the type of electromagnetic phenomena, and the intensity level of the phenomena.

⚠Warning **If electromagnetic interference is present or intermittent, use caution when continuing to use the system.**

NOTE: **Electromagnetic phenomena are not always present and may be transitory in nature, making it extremely difficult to identify the source of the interference.**

The table below outlines some common types of interference observed in imaging systems. Due to the numerous parameters of the transmitting device—such as the type of modulation used by the signal carrier, the source type, and the transmission level—it is impossible to describe all possible manifestations of interference. Interference may also degrade the imaging system's performance without being visible in the image. If diagnostic results appear suspicious, use alternative means to confirm the diagnosis.

B.1.1 Typical Interference on Ultrasound System

Imaging Mode	ESD[1]	RF[2]	Power Line[3]
2D or 3D	Change of operating mode, system settings, or system reset. Brief flashes in the displayed or recorded image.	For phased array probes, white radial bands or flashes in the center lines of the image. For linear array probes, white vertical bands, sometimes more pronounced on the sides of the image.	White dots, dashes, or diagonal lines near the center of the image.
Color	Change of operating mode, system settings, or system reset. Brief flashes in the displayed or recorded image.	Color flashes, radial or vertical bands, increase in background noise, or changes in image color.	Color flashes, dots, dashes, or changes in the color noise level.
Doppler	Change of operating mode, system settings, or system reset. Brief flashes in the displayed or recorded image.	Horizontal lines in the spectral display or tones, abnormal noise in the audio, or both.	Vertical lines in the spectral display, "popping" noise in the audio, or both.
M-mode	Change of operating mode, system settings, or system reset. Brief flashes in the displayed or recorded image.	Increase in the image background noise or white M-mode lines.	White dots, dashes, diagonal lines, or increase in image background noise.

1. Electrostatic discharge (ESD) caused by discharging of electric charge buildup on insulated surfaces or persons.
2. Radio frequency (RF) energy from RF transmitting equipment such as portable phones, handheld radios, wireless devices, commercial radio and TV stations, and so on.
3. Conducted interference on power lines or connected cables caused by other equipment, such as switching power supplies, electrical controls, and natural phenomena such as lightning.

B.1.2 Precautions to Protect from EMI

This medical equipment is approved to be used in hospitals, clinics, and other environmentally qualified institutions to prevent radio wave interference. Using this equipment in an inappropriate environment may cause electronic interference with nearby radios and televisions.

To protect the ultrasound system console from electromagnetic interference, take the following precautions:

- Operate the console at least 4.5 m (15 feet) away from motors, typewriters, elevators, and other sources of strong electromagnetic radiation.
- Operating in an enclosed area (with wood, plaster or concrete walls, floors and ceilings) helps prevent electromagnetic interference.
- Special shielding may be required if the console is to be operated in the vicinity of radio broadcast equipment.

B.2 Declaration of Emissions

Guidance and manufacturer´s declaration – electromagnetic emissions		
The ultrasound system is intended for use in the electromagnetic environment specified below. The customer or the user of ultrasound system should assure that it is used in such an environment.		
Emissions test	**Compliance**	**Electromagnetic environment - guidance**
RF emissions CISPR 11	Group 1	The ultrasound system uses RF energy only for its internal function. Therefore, its RF emissions are very low and are not likely to cause any interference in nearby electronic equipment.
RF emissions CISPR 11	Class A	The ultrasound system is suitable for use in all establishments other than domestic and those directly connected to the public low-voltage power supply network that supplies buildings used for domestic purposes.
Harmonic emissions IEC 61000-3-2	Class A	
Voltage fluctuations flicker emissions IEC 61000-3-3	Complies	

The approved accessories which meet the electromagnetic standard:

Accessories for Ultrasound System may affect their radiation levels. The accessories listed in this section have been tested in accordance with international standards for use in Ultrasound System and have been verified to meet radiation standards. Please use only the attachments listed in this section.

The user should ensure the electromagnetic compatibility of the Ultrasound System when attaching accessories to Ultrasound System. Unless otherwise specified, use only EMC compliant equipment.

No.	Item	Cable length	Shield or not
1	Power cable	≦2 m	No
2	Probe cable	<3 m	Yes
3	Printer cable	≦3 m	No
4	Printer signal cable	≦2.5 m	Yes
5	ECG cable	<4 m	Yes
6	Foot switch cable	≦3 m	Yes
7	Barcode reader cable	<2 m	No
8	Camera cable	<2 m	No
9	Gel warmer cable	<1 m	No

B.3 Declaration of Immunity

<table>
<tr><th colspan="4">Guidance and manufacturer´s declaration – electromagnetic immunity</th></tr>
<tr><td colspan="4">The ultrasound system is intended for use in the electromagnetic environment specified below. The customer or the user of the ultrasound system should assure that it is used in such an environment.</td></tr>
<tr><th>Phenomenon</th><th>Basic EMC Standard or Test Method</th><th>Regulatory Acceptable Level</th><th>EMC Environment and Guidance</th></tr>
<tr><td>Electrostatic discharge</td><td>IEC 61000-4-2</td><td>± 8 kV contact
± 2 kV, ± 4 kV, ± 8 kV, ± 15 kV air</td><td rowspan="9">Floors should be wood, concrete, or ceramic tile. If floors are covered with synthetic material, the relative humidity should be at least 30%.

Mains power quality should be that of a typical commercial and/or hospital environment.

Power frequency magnetic fields should be at levels characteristic of a typical location in a typical commercial and/or hospital environment.

Separation distance to radio communication equipment must be maintained according to the method below. Interference may occur in the vicinity of equipment marked with the symbol:



Image degradation or interference may occur due to conducted RF noise on the equipment mains power supply or other signal cable. Such interference is easily recognized and distinguishable from patient anatomy and physiological waveforms.

Interference of this type may delay the examination without affecting diagnostic accuracy. Additional mains/signal RF isolation or filtering may be needed if this type interference occurs frequently.</td></tr>
<tr><td>Radiated RF EM fields</td><td>IEC 61000-4-3</td><td>3 V/m
80 MHz - 2.7 GHz
80% AM at 1 kHz</td></tr>
<tr><td>Proximity fields from RF wireless communications equipment</td><td>IEC 61000-4-3</td><td>See the RF wireless communication equipment table in “Minimum Separation Distances”.</td></tr>
<tr><td>Rated power frequency magnetic fields</td><td>IEC 61000-4-8</td><td>30 A/m
50 Hz or 60 Hz</td></tr>
<tr><td>Electrical fast transients/bursts</td><td>IEC 61000-4-4</td><td>Power supply Port : ± 2 kV, 100 kHz repetition frequency;
Signal input/output parts Port: ± 1 kV, 100 kHz repetition frequency</td></tr>
<tr><td>Surges</td><td>IEC 61000-4-5</td><td>Line to line: ±0.5 kV, ±1 kV
Line to earth: ±0.5 kV, ±1 kV, ±2 kV</td></tr>
<tr><td>Conducted disturbances induced by RF fields</td><td>IEC 61000-4-6</td><td>3 V in 0.15 MHz - 80 MHz
6 V in ISM bands between 0.15 MHz and 80 MHz
80 % AM at 1kHz</td></tr>
<tr><td>Voltage dips</td><td>IEC 61000-4-11</td><td>0% U_T: 0.5 cycle
at 0°, 45°, 90°, 135°, 180°, 225°, 270°, and 315°
0% U_T: 1 cycle and 70% U_T: 25/30 cycles
Single phase: at 0°</td></tr>
<tr><td>Voltage interruptions</td><td>IEC 61000-4-11</td><td>0% U_T: 250/300 cycles</td></tr>
</table>

NOTE

1. U_T is the a.c. mains voltage prior to application of the test level.
2. When the interference signal is injected into the machine through the power line and generates interference on the transducer, the imaging system may have regular points or broken lines or line segments, but it will not be recognized as a physiological signal and does not affect the diagnosis.
3. During the discharge, the device has signal interference, and returns to the normal operation of the previous operating mode within 10 seconds without losing any user settings or stored data, and can continue to provide its expected functions and maintain basic performance, this phenomenon is acceptable.
4. These guidelines may not apply in all situations. Electromagnetic propagation is affected by absorption and reflection from structures, objects, and people.
5. If noise generated from other electronic equipment is near the probe's center frequency, noise may appear on the image. Good power line isolation is required.

B.4 Minimum Separation Distances

Minimum separation distances between portable and mobile RF communications equipment and the ultrasound system

The ultrasound system is intended for use in an electromagnetic environment in which radiated RF disturbances are controlled. The customer or the user of the ultrasound system can help prevent electromagnetic interference by maintaining a minimum distance between portable and mobile RF communications equipment (transmitters) and the ultrasound system as recommended below, according to the maximum output power of the communications equipment. Portable and mobile RF communications equipment (e.g. two-way radio, cellular/cordless telephones and similar equipment) should be used no closer to any part of the ultrasound system, including cables, than determined according to the following method:

Test frequency (MHz)	Band (MHz)	Service	Modulation	Maximum power (W)	Distance (m)	Immunity test level (V/m)
385	380 - 390	TETRA 400	Pulse modulation 18Hz	1.8	0.3	27
450	430 -470	GMRS 460, FRS 460	FM ±5 kHz deviation 1 kHz sine	2	0.3	28
710	704 - 787	LTE Band 13, 17	Pulse modulation 217 Hz	0.2	0.3	9
745						
780						
810	800 - 960	GSM 800/900, TETRA 800, iDEN 820, CDMA 850, LTE Band 5	Pulse modulation 18 Hz	2	0.3	28
870						
930						
1720	1700 - 1990	GSM 1800, CDMA 1900, GSM 1900, DECT, LTE Band 1, 3, 4, 25, UMTS	Pulse modulation 217 Hz	2	0.3	28
1845						
1970						
2450	2400 - 2570	Bluetooth, WLAN, 802.11 b/g/n, RFID 2450, LTE Band 7	Pulse modulation 217 Hz	2	0.3	28
5240	5100 - 5800	WLAN, 802.11 a/n	Pulse modulation 217 Hz	0.2	0.3	9
5500						
5785						

For transmitters rated at a maximum output power not listed above the recommended separation distance d in meters (m) can be estimated using the equation applicable to the frequency of the transmitter, where P is the maximum output power rating of the transmitter in watts (W) according to the transmitter manufacturer.

NOTE 1 At 80 MHz and 800 MHz, the separation distance for the higher frequency range applies.

NOTE 2 These guidelines may not apply in all situations. Electromagnetic propagation is affected by absorption and reflection from structures, objects and people.

Appendix C. Toxic and Hazardous Substances or Elements

Parts	Toxic and harmful substances or elements					
	Plumbum (Pb)	Mercury (Hg)	Cadmium (Cd)	Chromium 6 (Cr6+)	PBB	PBDE
Plastic case	○	○	○	○	○	○
Metal bracket	○	○	×	×	○	○
Keyboard silicone	○	○	○	○	○	○
Trackball	×	○	○	○	○	○
Cables	×	○	○	○	○	○
PCBA	×	○	○	○	○	○
Hard disk	○	○	○	○	○	○

○：Means that the content of the toxic and harmful substance in all homogeneous materials of the part is below the limit specified in local standard.

×：It means that the content of the toxic and harmful substance in at least one homogeneous material of the part exceeds the limit requirement specified in the local standard.

For products sold since the date of sale, this table shows that products in our supply chain may contain these substances. NOTE: all listed components may or may not be included in the products sold.